client	**ALSTOM T&D - Noventa di Piave (Venezia), Italy**
equipment under test	One pole of disconnector 550 kV type S2DAT-550/3150
tests performed	Radio Interference Voltage (R.I.V.) test; Dielectric tests.
normative documents	IEC 60129, 1998 - IEC 60694, 1996 and Client's requests
receipt date of the sample	October 30, 2000
test date	**from** November 15, 2000 **to** November 22, 2000

the test results relate only to the sample tested
this document shall not be reproduced except in full without the written approval of CESI
and of the accreditation body, if any

no. of pages	27	**no. of pages annexed**	3
issue date	March 21, 2001		

prepared	PeC/TEST - C. Del Giorgio
verified	PeC/TEST - D. Pirola, A. Cattaneo
approved	PeC/TEST - V. Scarioni

CESI
CENTRO ELETTROTECNICO SPERIMENTALE ITALIANO
Business Unit
Prove e Componenti
Il Responsabile del Laboratorio

tests witnessed by: Mr. Piccoli - ALSTOM T&D

identification of the object: effected

The Manufacturer guarantees that the tested object is manufactured according to the submitted drawings.

CESI checked that these drawings adequately represent in shape and dimensions the essential details and the parts of the tested object.

These drawings identified by CESI and numbered **A1/014250 no.1 to 4** are annexed to this document.

the data necessary to permit repetition of the tests are contained in the document marked:
AT-A0/037225

The measurement uncertainties of the test results reported in this document are the following:

- dielectric tests with impulse voltage : **peak voltage: ± 3 % ; time parameters: ± 10 %**
- dielectric tests with alternating voltage : **voltage (rms): ± 3 %**

The measurement uncertainties are estimated at the level of twice the standard deviation (corresponding, in the case of normal distribution, to a confidence level of about 95 %) and have to be considered as maximum values.

activity code: 29186B
keywords: 12015R - 23450P - 31040K - 42010U - 53001D - 62501B

contents	page	test date
rated characteristics of the tested object assigned by the Client	4	
Test setting	5	
Dielectric test conditions	6	
Measurement of the R.I.V.	7 ÷ 10	November 15-16, 2000
Determination of the 50% discharge voltage with the "up and down" test method	11	November 16, 2000
Dry switching impulse withstand voltage test	12	November 16-17, 2000
Determination of the 50% discharge voltage with the "up and down" test method (combined voltage test)	13	November 17, 2000
Dry switching impulse withstand voltage test (combined voltage test)	14	November 17, 2000
Dry lightning impulse withstand voltage test (combined voltage test)	15	November 17, 2000
Dry lightning impulse withstand voltage test	16	November 20, 2000
Dry power frequency withstand voltage test	17	November 20, 2000
Dry power frequency withstand voltage test in out-of-phase condition	18	November 20, 2000
Wet switching impulse withstand voltage test	19	November 21, 2000
Wet switching impulse withstand voltage test (combined voltage test)	20	November 21, 2000
Circuits A062 - A102 - A006 - A045 - A065 - A064	21 ÷ 26	
Panoramic view	27	

Pages annexed

- charts from test report AT-A0/037225 (total pages no.3)

Reference document annexed

- drawings identified by CESI and numbered **A1/014250 no.1 to 4**

Rated characteristics of the tested object assigned by the Client

disconnector	
manufacturer	ALSTOM
type	S2DAT-550/3150
drawing no.	DIN-xxxxx
serial number	-----
voltage	550 kV
normal current	3150 A
frequency	50 Hz
lightning impulse withstand voltage	1550 kV
switching impulse withstand voltage	1175 kV
power frequency withstand voltage	710 kV
short-time withstand current	63 kA
peak withstand current	160 kA
short-circuit duration	3 s

Test setting

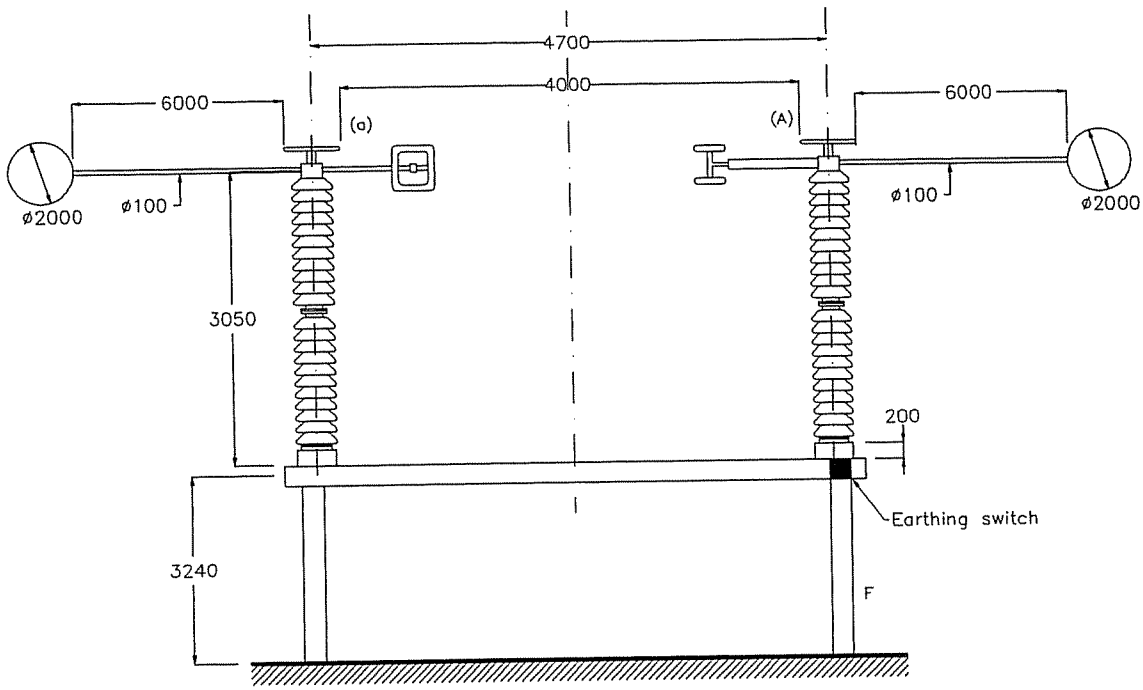

all the dimensions are given in mm

Dielectric tests

test configurations

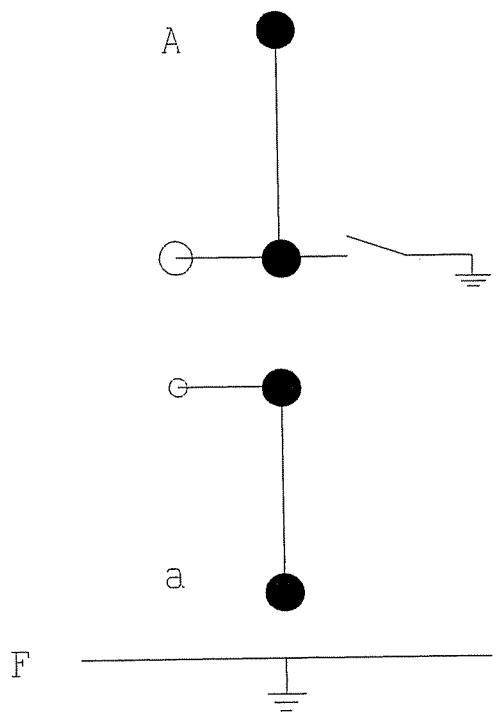

Test condition in general case

Test condition	Switching device	Voltage applied to	Earth connected to
1	closed	Aa	F
2	open	A	a F
3	open	a	A F

Power - frequency test conditions for longitudinal insulation

Test condition	Voltage applied to	Earth connected to
4	A and a	F

Impulse test conditions for longitudinal insulation

Test condition	Main part	Complementary part	Earth connected to
	Voltage applied to		
5	A	a	F
6	a	A	F

Measurement of the radio interference level (CISPR 16.1 1993; CISPR 18.2 1986 Standards)

test object: background noise (without test object)
test circuit: A062-A102-A006 (for the A determination)
test arrangement: ---
instrument: PMM 8010

atmospheric conditions			
b	t_d	t_w	h
kPa	°C	°C	%
100,0	13,5	10,0	64,0

frequency: 1,0 MHz

a: instrument reading [dB / 1 μV / 50 Ω]
b: corrected and reported value b = a + 15.5 + A [dB /1μV/ 300Ω]
c: reported and corrected value c = $10^{b/20}$ [μV]

A = 1 dB attenuation

date: November 15, 2000

high voltage V_{AT}	radiointerference level (RI) recorded at the last decrease of the test voltage		
kV_{rms}	a	b	c
0	10,5	27	22
50	10,5	27	22
100	10,5	27	22
150	10,5	27	22
200	10,5	27	22
250	10,5	27	22
300	10,5	27	22
350	10,5	27	22
400	10,5	27	22
450	10,5	27	22

Measurement of the radio interference level (CISPR 16.1 1993; CISPR 18.2 1986 Standards)

test object: One pole of disconnector 550 kV type S2DAT-550/3150
test circuit: A062-A102-A006 (for the A determination)
test arrangement: Test condition no.3 to page 6
instrument: PMM 8010

atmospheric conditions			
b	t_d	t_w	h
kPa	°C	°C	%
100,4	14,0	10,0	60,0

frequency: 1,0 MHz

a: instrument reading [dB / 1 μV / 50 Ω]
b: corrected and reported value b = a + 15.5 + A [dB /1μV/ 300Ω]
c: reported and corrected value c = $10^{b/20}$ [μV]

A = 1 dB attenuation

date: November 16, 2000

high voltage V_{AT}	radiointerference level (RI) recorded at the last decrease of the test voltage		
kV_{rms}	a	b	c
0	10,5	27,0	22
35	10,5	27,0	22
70	10,5	27,0	22
105	10,5	27,0	22
140	10,5	27,0	22
175	10,5	27,0	22
210	10,5	27,0	22
245	10,5	27,0	22
280	11,5	28,0	25
315	15,5	32,0	40
350	31,5	48,0	251

NOTE: r.i.v. characteristics in chart no.1

Measurement of the radio interference level (CISPR 16.1 1993; CISPR 18.2 1986 Standards)

test object: One pole of disconnector 550 kV type S2DAT-550/3150
test circuit: A062-A102-A006 (for the A determination)
test arrangement: Test condition no.2 to page 6
instrument: PMM 8010

atmospheric conditions			
b	t_d	t_w	h
kPa	°C	°C	%
100,10	14,5	11,5	69,8

frequency: 1,0 MHz

a: instrument reading [dB / 1 μV / 50 Ω]
b: corrected and reported value b = a + 15.5 + A [dB /1μV/ 300Ω]
c: reported and corrected value c = $10^{b/20}$ [μV]

A = 1 dB attenuation

date: November 16, 2000

high voltage V_{AT}	radiointerference level (RI) recorded at the last decrease of the test voltage		
kV_{rms}	a	b	c
0	10,5	27,0	22
35	10,5	27,0	22
70	10,5	27,0	22
105	10,5	27,0	22
140	10,5	27,0	22
175	13,5	30,0	32
210	15,0	31,5	38
245	16,5	33,0	45
280	22,5	39,0	89
315	36,0	52,5	422
350	47,0	63,5	1496

NOTE: r.i.v. characteristics in chart no.2

Measurement of the radio interference level (CISPR 16.1 1993; CISPR 18.2 1986 Standards)

test object: One pole of disconnector 550 kV type S2DAT-550/3150
test circuit: A062-A102-A006 (for the A determination)
test arrangement: Test condition no.1 to page 6
instrument: PMM 8010

atmospheric conditions			
b	t_d	t_w	h
kPa	°C	°C	%
100,10	14,5	11,5	69,8

frequency: 1,0 MHz

a: instrument reading [dB / 1 μV / 50 Ω]
b: corrected and reported value b = a + 15.5 + A [dB /1μV/ 300Ω]
c: reported and corrected value c = $10^{b/20}$ [μV]

A = 1 dB attenuation

date: November 16, 2000

high voltage V_{AT}	radiointerference level (RI) recorded at the last decrease of the test voltage		
kV_{rms}	a	b	c
0	10,5	27,0	22
35	10,5	27,0	22
70	10,5	27,0	22
105	10,5	27,0	22
140	10,5	27,0	22
175	10,5	27,0	22
210	10,5	27,0	22
245	10,5	27,0	22
280	15,5	32,0	40
315	18,5	35,0	56
350	22,5	39,0	89

NOTE: r.i.v. characteristics in chart no.3

Determination of the 50% discharge voltage with the "up and down" test method

Dry switching impulse.

test object: One pole of disconnector 550 kV type S3CDT-550/3150

test circuit: A045

test condition	applied impulses	polarity	$U_{50\%}$ not corrected	correction factor	$U_{50\%}$ corrected	$U_{10\%}$	test date
no.	no.		kV_{peak}	K	kV_{peak}	kV_{peak}	
3	30	positive	1363	0,983	1386	1278	November 16, 2000

note:

Dry switching impulse withstand voltage test

test object: One pole of disconnector 550 kV type S2DAT-550/3150

test circuit: A045

test condition	positive polarity						negative polarity						test date
	requested voltage	correction factor	applied voltage	applied impulses	flashover	test result	requested voltage	correction factor	applied voltage	applied impulses	flashover	test result	
no.	kV_{peak}	K	kV_{peak}	no.	no.		kV_{peak}	K	kV_{peak}	no.	no.		
1	1175	0,986	1158	15	0	withstand	1175	0,986	1158	15	0	withstand	November 16, 2000
2	1175	0,986	1158	15	0	withstand	1175	0,986	1158	15	0	withstand	November 16, 2000
3	----	----	----	--	-	---------	1175	0,986	1158	15	0	withstand	November 17, 2000

note:

Determination of the 50% discharge voltage with the "up and down" test method

Dry switching impulse (combined voltage test).

test object: One pole of disconnector 550 kV type S2DAT-550/3150

test circuit: A045

test condition	applied impulses	power frequency peak voltage	switching impulse peak voltage		correction factor	switching impulse combined voltage			test date
			polarity	$U_{50\%}$ not corrected		$U_{50\%}$ not corrected	$U_{50\%}$ corrected	$U_{10\%}$	
no.	no.	kV_{peak}		kV_{peak}	K	kV_{peak}	kV_{peak}	kV_{peak}	
6	30	−450	positive	1253	0,992	1703	1717	1580	November 17, 2000

note: power frequency applied on terminal a

Dry switching impulse withstand voltage test (combined voltage test)

test object: One pole of disconnector 550 kV type S2DAT-550/3150

test circuit: A065

test condition	polarity	switching impulse peak voltage			power frequency peak voltage			applied impulses	flashover	test result	test date
		required	correction factor	applied	required	correction factor	applied				
		kV_{peak}	K_t	kV_{peak}	kV_{peak}	K_t	kV_{peak}	no.	no.		
6	negative	900	0,985	887	+450	0,985	+443	15	0	withstand	November 17, 2000
5	positive	900	0,985	887	−450	0,985	−443	15	0	withstand	November 17, 2000
5	negative	900	0,985	887	+450	0,985	+443	15	0	withstand	November 17, 2000

note:

Dry lightning impulse withstand voltage test (combined voltage test)

test object: One pole of disconnector 550 kV type S2DAT-550/3150

test circuit: A065

test condition	polarity	lightning impulse peak voltage			power frequency peak voltage			applied impulses	flashover	test result	test date
		required	correction factor	applied	required	correction factor	applied				
		kV_{peak}	K_t	kV_{peak}	kV_{peak}	K_t	kV_{peak}	no.	no.		
5	negative	1550	0,975	1510	+315	0,975	+307	15	0	withstand	November 17, 2000
5	positive	1550	0,975	1510	−315	0,975	−307	15	0	withstand	November 17, 2000
6	negative	1550	0,975	1510	+315	0,975	+307	15	0	withstand	November 17, 2000
6	positive	1550	0,975	1510	−315	0,975	−307	15	0	withstand	November 17, 2000

note:

Dry lightning impulse withstand voltage test

test object: One pole of disconnector 550 kV type S2DAT-550/3150

test circuit: A045

test condition	positive polarity						negative polarity						test date
	requested voltage	correction factor	applied voltage	applied impulses	flashover	test result	requested voltage	correction factor	applied voltage	applied impulses	flashover	test result	
no.	kV_{peak}	K	kV_{peak}	no.	no.		kV_{peak}	K	kV_{peak}	no.	no.		
1	1550	0,975	1511	15	0	withstand	1550	0,975	1511	15	0	withstand	November 20, 2000

note:

Dry power frequency withstand voltage test

test object: One pole of disconnector 550 kV type S2DAT-550/3150

test circuit: A062

test condition	voltage			test duration	test result	test date
	required (U)	correction factor	applied ($U \times K_t$)			
no.	kV_{rms}	K_t	kV_{rms}	s		
1	620	0,994	616	60	withstand	November 20, 2000
2	620	0,994	616	60	withstand	November 20, 2000
3	620	0,994	616	60	withstand	November 20, 2000
1	620	0,994	616	72	withstand	November 20, 2000
2	620	0,994	616	72	withstand	November 20, 2000
3	620	0,994	616	72	withstand	November 20, 2000

note:

Dry power frequency withstand voltage test in out-of-phase condition

test object: One pole of disconnector 550 kV type S2DAT-550/3150

test circuit: A064

test condition	voltage required U	voltage correction factor	voltage applied $U \times K_t$	test duration	test result	test date
	kV_{rms}	K_t	kV_{rms}	s		
4	800	0,995	796	60	withstand	November 20, 2000
4	800	0,995	796	72	withstand	November 20, 2000

note: applied voltage:

on terminal A = 496 kV_{rms}

on terminal a = 300 kV_{rms}

Wet switching impulse withstand voltage test

test object: One pole of disconnector 550 kV type S2DAT-550/3150

test circuit: A045

	precipitation conditions				
	top	center	bottom	water temperature °C	water resistivity Ω × m
vertical	1,4	--	1,5	12,0	100,0
horizontal	1,2	--	1,2		

test condition	positive polarity						negative polarity						test date
	requested voltage	correction factor	applied voltage	applied impulses	flashover	test result	requested voltage	correction factor	applied voltage	applied impulses	flashover	test result	
no.	kV_{peak}	K	kV_{peak}	no.	no.		kV_{peak}	K	kV_{peak}	no.	no.		
1	1175	1,000	1175	15	0	withstand	1175	1,000	1175	15	0	withstand	November 21, 2000
2	1175	1,000	1175	15	0	withstand	1175	1,000	1175	15	0	withstand	November 21, 2000
3	1175	1,000	1175	15	0	withstand	1175	1,000	1175	15	0	withstand	November 21, 2000

note:

Wet switching impulse withstand voltage test (combined voltage test)

test object: One pole of disconnector 550 kV type S2DAT-550/3150

test circuit: A065

	precipitation conditions				
	top	center	bottom	water temperature °C	water resistivity Ω × m
vertical	1,4	--	1,5	12,0	100,0
horizontal	1,2	--	1,2		

test condition	polarity	switching impulse peak voltage			power frequency peak voltage			applied impulses	flashover	test result	test date
		required	correction factor	applied	required	correction factor	applied				
		kV_{peak}	K_t	kV_{peak}	kV_{peak}	K_t	kV_{peak}	no.	no.		
5	negative	900	1,000	900	+450	1,000	+450	15	0	withstand	November 21, 2000
5	positive	900	1,000	900	−450	1,000	−450	15	0	withstand	November 21, 2000
6	negative	900	1,000	900	+450	1,000	+450	15	0	withstand	November 21, 2000
6	positive	900	1,000	900	−450	1,000	−450	15	0	withstand	November 21, 2000

note:

circuit A062

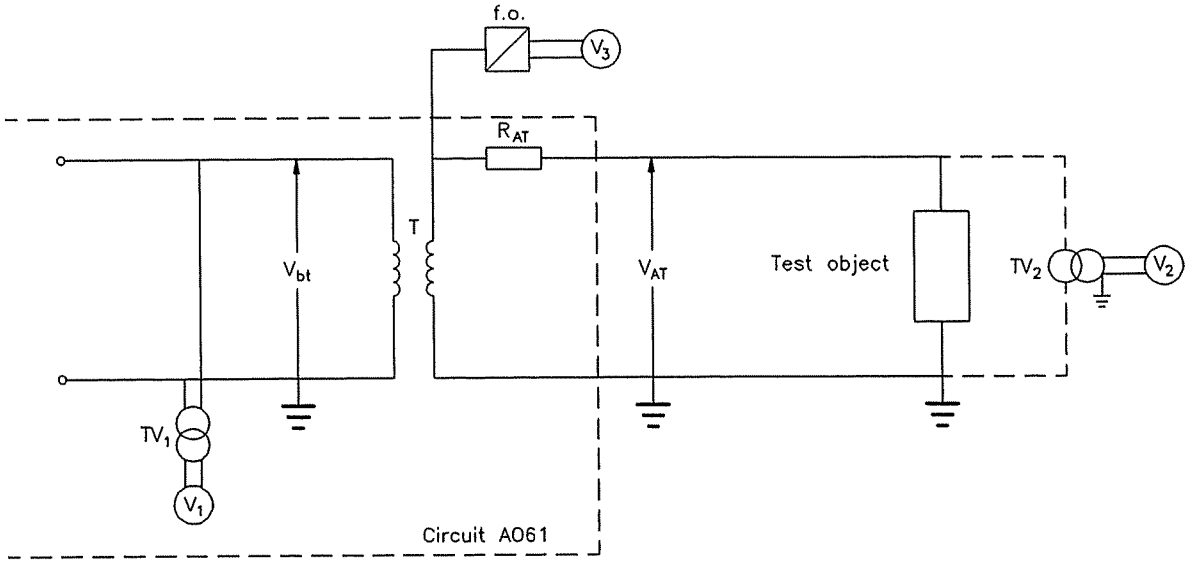

power frequency measuring circuit

TV_2: voltage reducer
V_2 : voltmeter
f.o : electrooptical link for the direct reading of the voltage
V_3 : voltmeter
TV_1: voltage reducer
V_1 : voltmeter

circuit A102

measurement of radiointerference level (Standard CISPR 16 1987, CISPR 18.2 1986)

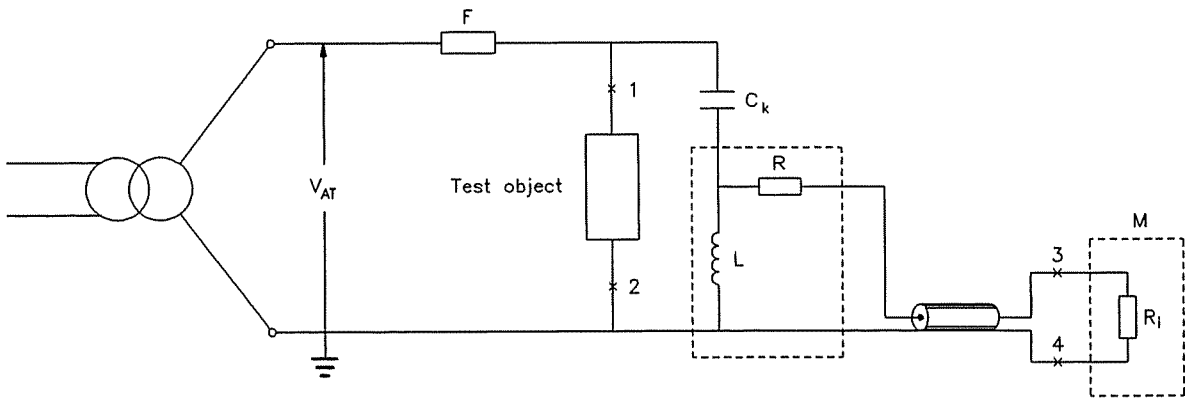

F : high voltage filter
C_k : coupling capacitor
B : low voltage unit
R : low voltage unit resistance (250 Ω)
L : 50 Hz low-impedance inductor
M : measuring instrument PMM 8010
R_i : internal resistance of the measuring instrument (50 Ω)

circuit A006

measurement of the radiointerference level (CISPR 16 1987, CISPR 18.2 1986 Standards)
attenuation of the measuring circuit (A)

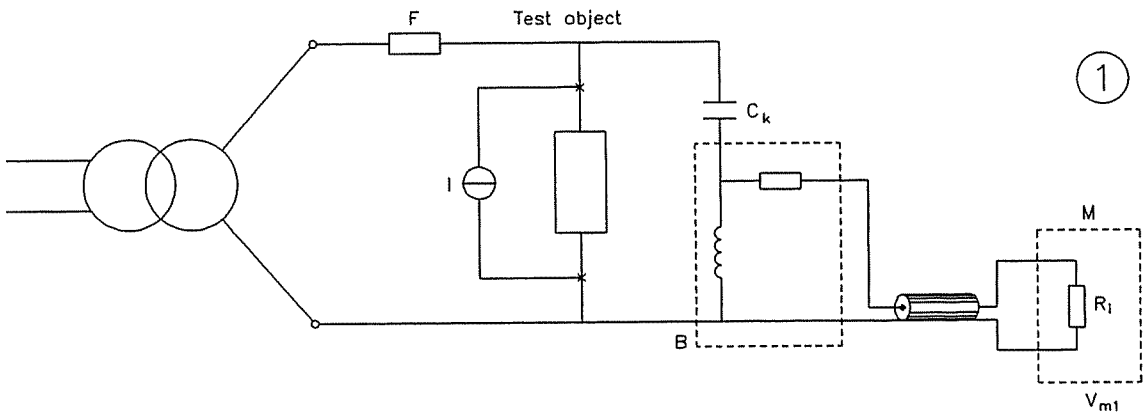

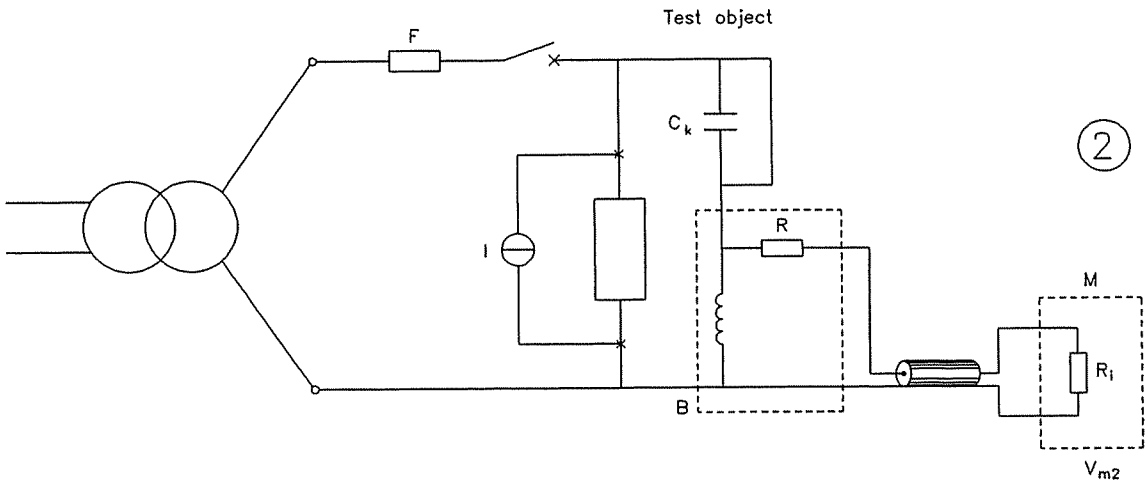

I : current impulse generator

V_{m1}	V_{m2}	A $V_{m2} - V_{m1}$
[dB]	[dB]	[dB]
42,0	43,0	1

circuit A045

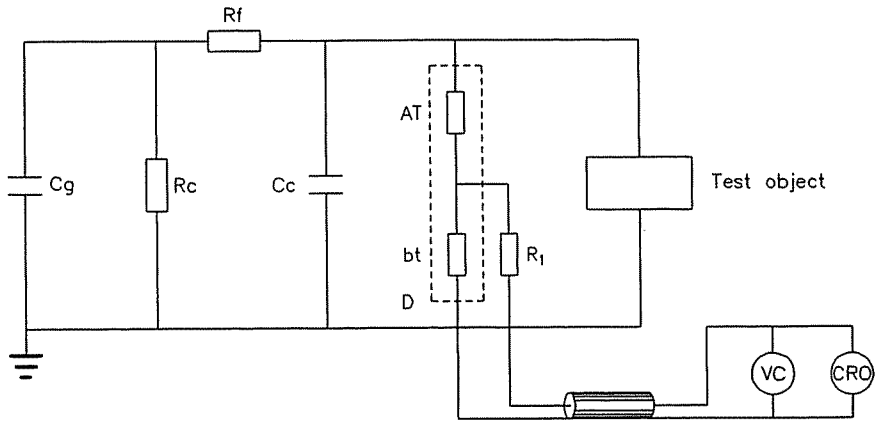

impulse test circuit

Cg : Impulse generator capacitance
Rf : Front resistor
Rc : Tail resistor
Cc : Load capacitance
D : Divider type RC series
R_1 : Matching impedance
Vc : Peak voltmeter
CRO: Oscilloscope

circuit A065

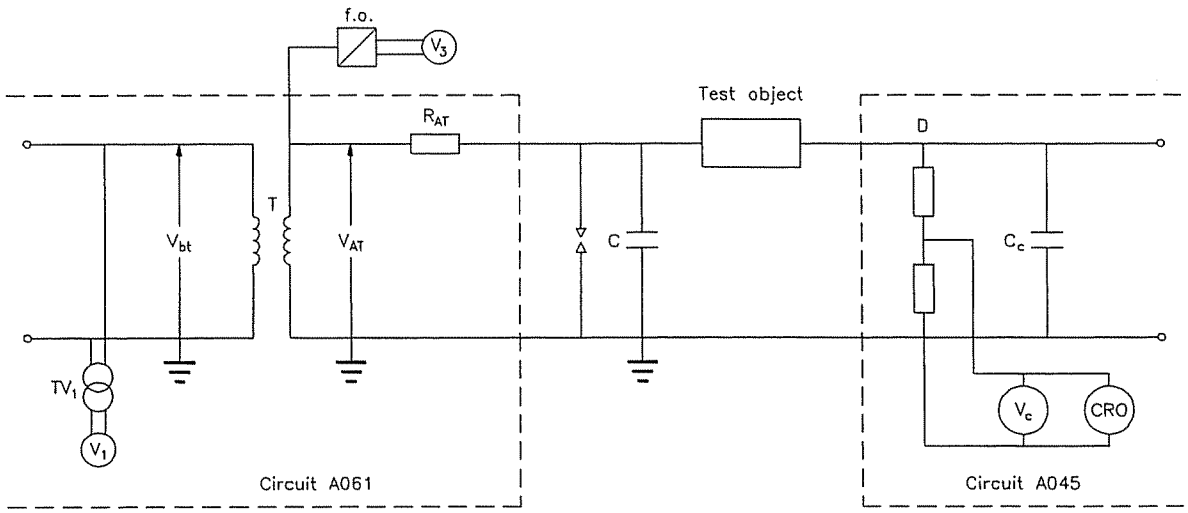

circuit for combined voltage test L.I./50 Hz

C : capacitor

power frequency measuring circuit - circuit A061

f.o. : electrooptical link for the direct reading of the voltage
V_3 : voltmeter
TV_1 : voltage reducer
V_1O : voltmeter

impulse voltage measuring system - circuit A045

D : divider RC series
V_c : peak voltmeter
CRO: oscilloscope

circuit A064

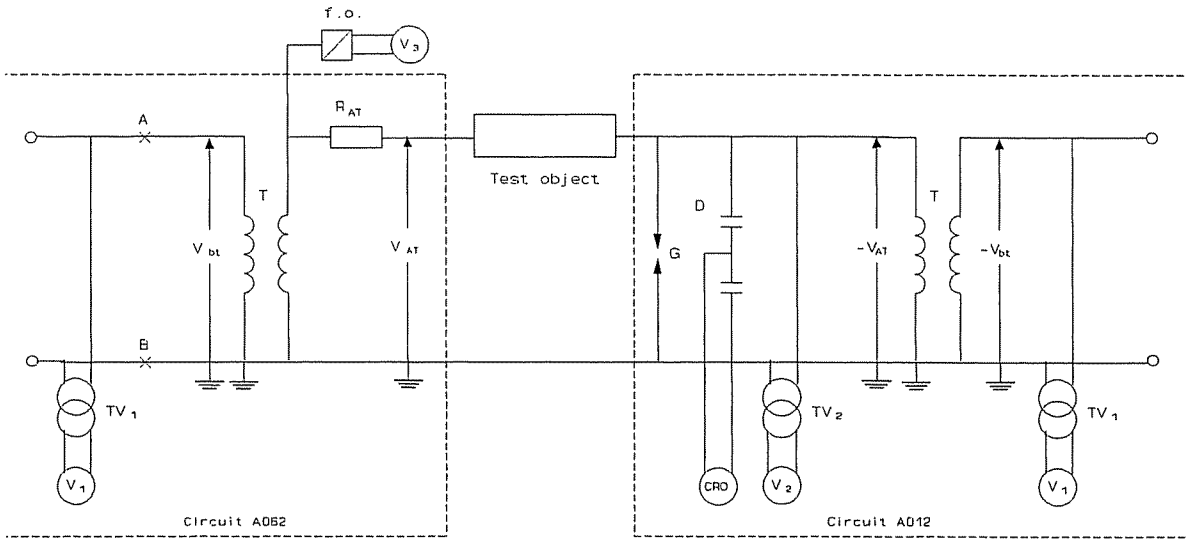

measuring circuit for test in out-of-phase condition (plant P170)

power frequency measuring circuit - circuit A061

TV_1 : voltage reducer
V_1 : voltmeter
T : booster transformer
f.o. : electrooptical link for the direct reading of the voltage
V_3 : voltmeter
R_{AT} : protection resistor

power frequency measuring circuit - circuit A012

G : gap protection 1500 mm
D : capacitive voltage divider
CRO: oscilloscope
TV_2 : voltage reducer
V_2 : voltmeter
T : booster transformer
TV_1 : voltage reducer
V_1 : voltmeter

Panoramic view

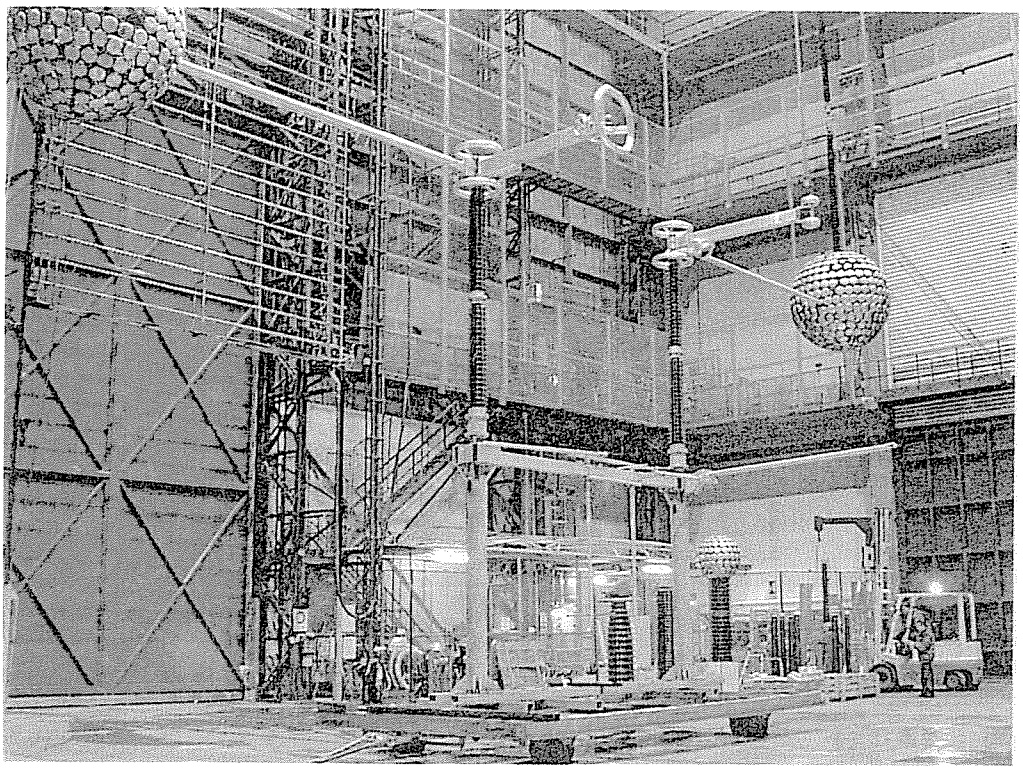

Photo no. 1

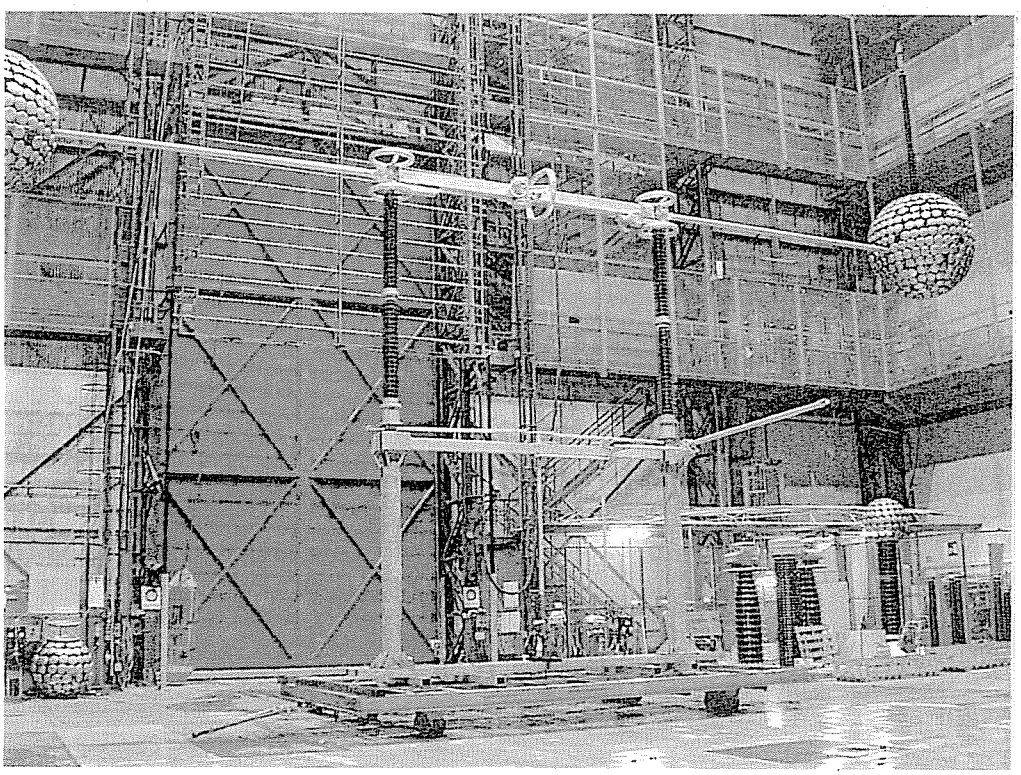

S2DAT 550 kV - config. 3

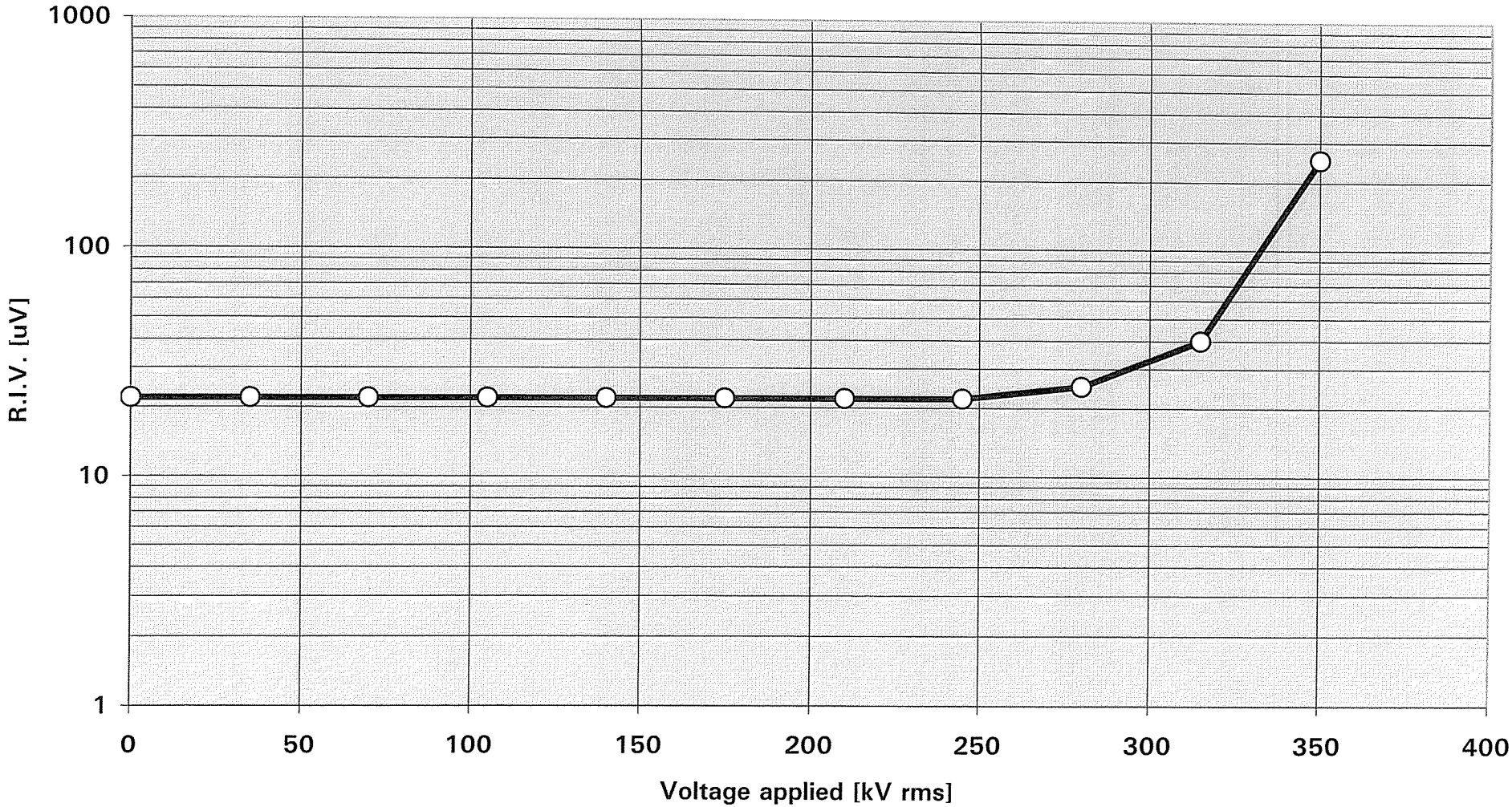

CESI TEST A0/037225 chart n.1

S2DAT 550 kV - config. 2

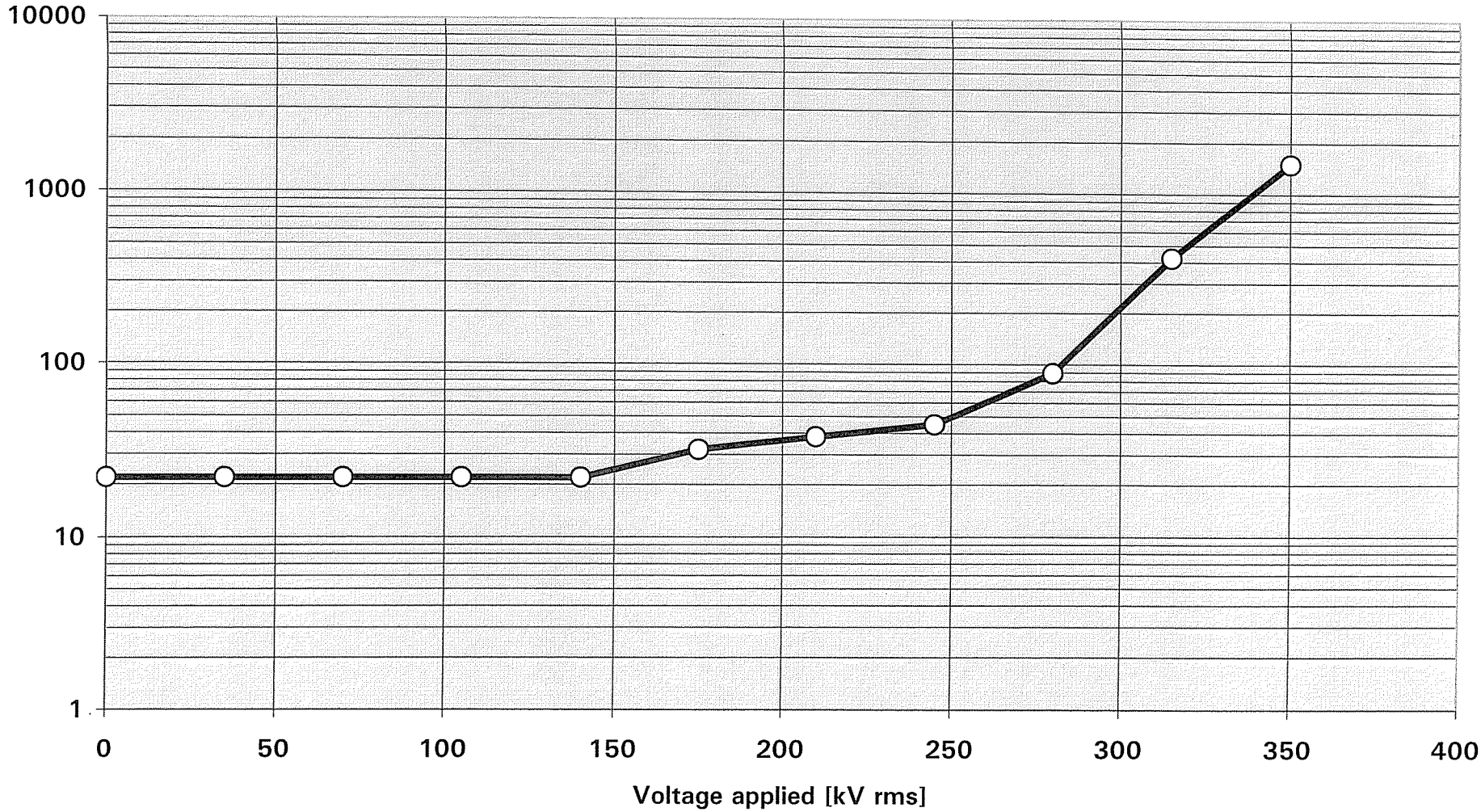

CESI TEST A0/037225 chart n.2

CESI TEST A0/037225 chart n.3

S2DAT 550 kV- config. 1