ALSTOM

TRANSMISSION & DISTRIBUTION
Transformateurs de Mesure

CAPACITOR VOLTAGE TRANSFORMER

CCV 525 15 408

TEST CERTIFICATE

N°: 26 906

51, avenue Jean Jaurès
BP 380
92541 Montrouge Cedex France
Tél. : 33 (0)1 47 46 61 11
Fax : 33 (0)1 46 57 74 95

ALSTOM T&D Transformateurs de Mesure SA
au capital de 14 000 000 F
343 074 092 RCS Nanterre
Siret 343 074 092 00028
APE 311 A - TVA FR 05 343 074 092

ALSTOM

ALSTOM T&D Transformateurs de Mesure SA
au capital de 14 000 000 F
Siège social : 51, avenue Jean Jaurès
BP 380 92541 Montrouge Cedex France
343 074 092 RCS Nanterre
APE 311 A - TVA FR 05 343 074 092

CERTIFICAT D'ESSAI N° :
TEST CERTIFICATE N° : **26906**
PROTOCOLO DE PRUEBAS N° :

CAPACITOR VOLTAGE TRANSFORMER

Type :	CCV 525
Serial number :	01- XQ0008-001-01
Highest primary voltage :	525 kV
Power frequency withstand voltage	680 kV
Impulse withstand voltage :	1550 kV
Rated frequency :	50 Hz
Ratio :	500 000/√3 V // 110 V
	500 000/√3 V // 110/√3 V
Burden and accuracy : 1a3 – 1a1	40 VA class 0.2
1a2 – 1a1	40 VA class 0.2
2a3 – 2a1	40 VA class 0.2
2a2 – 2a1	40 VA class 0.2
Rated voltage factor :	1.5 Un – 30 s
Thermal burden:	750 VA
Rated capacitance at 50 Hz:	3000 pF – 5 %; +10 %
Standards:	AS 1243-1982
Outline drawing:	

Montrouge, 10 august 2 001

Executive responsible for the tests

R. TORRES

Technical manager

A. JOUNAY

Quality Manager

T. TAMPIER

ALSTOM

ALSTOM T&D Transformateurs de Mesure SA
au capital de 14 000 000 F
Siège social : 51, avenue Jean Jaurès
BP 380 92541 Montrouge Cedex France
343 074 092 RCS Nanterre
APE 311 A - TVA FR 05 343 074 092

ESSAIS REALISES – TETS LIST

N° :	Consistance des essais Table of contents Contenido de las pruebas	Références References Referencias	Page Page Pagina	Conclusion des essais (1) Conclusion
1	Vérification de la précision au titre des essais individuels de série. Accuracy test.	AS 1243	3-4	C
2	Vérification de la précision avec construction du diagramme d'erreur (en cercle) et après les essais de choc. Accuracy test with circle diagram, made after lightning impulse withstand test.	AS 1243	5-6	C
3	Vérification de la précision à 49.5 Hz et 50.5 Hz. Test for accuracy at 49.5 Hz and 50.5 Hz.	AS 1243	7-10	C
4	Vérification de la précision aux températures extrèmes. Test for accuracy at the extrmes of the temperature range.	AS 1243	11-14	C
5	Impédance des enroulements secondaires. Impedance of the secondary windings.	AS 1243	15	S
6	Mesure du courant de court-circuit secondaire. Secondary short-circuit current.	AS 1243	15	S
7	Réponse en régime transitoire. Transient response test.	AS 1243	16	C
8	Mesure du taux total d'harmoniques. Total harmonics determination.		17	C
9	Essai de tenue aux ondes de choc de foudre. Lightning impulse withstand test.	AS 1243	18	S
10	Essai de ferro-résonnace. Ferro-resonance test.	AS 1243	19	S
11	Determination du coefficient de température. Temperature coefficient determination.	IEC 358	20-21	S

(1) S : satisfaisant-satisfactory-satisfactorio. C : conforme-conform-conforme.

ALSTOM

ALSTOM T&D Transformateurs de Mesure SA
au capital de 14 000 000 F
Siège social : 51, avenue Jean Jaurès
BP 380 92541 Montrouge Cedex France
343 074 092 RCS Nanterre
APE 311 A - TVA FR 05 343 074 092

1. ACCURACY TEST RESULTS

Initial measurements on apparatus n° : 01XQ0008-001-01

Appareil N° : Serial N° : Aparato N° :	Couplage et circuit Coupling and circuits Acoplamiento y Arrollamiento	Charge en VA et cos φ : 0.8 Burden in VA and Power factor Carga en VA Y cos φ : 1		Nombre de Un Times rated Primary Fracción de Un	Erreur de rapport en % Ratio error in % Error de relación en %	Déphasage en Minutes Phase error in minutes Desfasaje en Minutos	Observations Notes Oservaciones
	1a3 –1a1	40	40*	1.1	-0.02	+0.5	
				1	-0.02	+0.5	
				0.9	-0.02	+0.5	
		40	0*	1.1	+0.04	+1	
				1	+0.04	+1	
				0.9	+0.04	+1	
		10	0*	1.1	+0.12	+2	
				1	+0.12	+2	
				0.9	+0.11	+2	
		40	40*	0.2	-0.02	+4	
		0	0*	0.2	+0.14	+4.5	
	1a2 –1a1	40	40*	1.1	-0.11	-0.5	
				1	-0.11	-0.5	
				0.9	-0.11	0	
		40	0*	1.1	-0.04	+0.5	
				1	-0.05	+0.5	
				0.9	-0.05	+0.5	
		10	0*	1.1	+0.04	+1.5	
				1	+0.04	+2	
				0.9	+0.04	+2	
		40	40*	0.2	-0.10	+3.5	
		0	0*	0.2	+0.09	+5	

- Simultaneous burden on the other secondary winding

Date: 26/07/2001
Temperature: 30°C

ALSTOM

ALSTOM T&D Transformateurs de Mesure SA
au capital de 14 000 000 F
Siège social : 51, avenue Jean Jaurès
BP 380 92541 Montrouge Cedex France
343 074 092 RCS Nanterre
APE 311 A - TVA FR 05 343 074 092

CERTIFICAT D'ESSAI N° :
TEST CERTIFICATE N° : **26906**
PROTOCOLO DE PRUEBAS N° :

Initial measurements on apparatus n° : 01XQ0008-001-01

Appareil N° : Serial N° : Aparato N° :	Couplage et circuit Coupling and circuits Acoplamiento y Arrollamiento	Charge en VA et cos φ : 0.8 Burden in VA and Power factor Carga en VA Y cos φ : 1		Nombre de Un Times rated Primary Fracción de Un	Erreur de rapport en % Ratio error in % Error de relación en %	Déphasage en Minutes Phase error in minutes Desfasaje en Minutos	Observations Notes Oservaciones
	2a3 –2a1	40	40*	1.1	-0.03	+1	
				1	-0.03	+1	
				0.9	-0.03	+1	
		40	0*	1.1	+0.03	+2	
				1	+0.03	+2	
				0.9	+0.03	+2	
		10	0*	1.1	+0.12	+2	
				1	+0.12	+2	
				0.9	+0.12	+2.5	
		40	40*	0.2	-0.04	+4	
		0	0*	0.2	+0.14	+4.5	
	2a2 –2a1	40	40*	1.1	-0.11	+0.5	
				1	-0.11	+0.5	
				0.9	-0.12	+1	
		40	0*	1.1	-0.05	1.5	
				1	-0.05	+1.5	
				0.9	-0.05	+1.5	
		10	0*	1.1	+0.04	+2	
				1	+0.04	+2	
				0.9	+0.04	+2	
		40	40*	0.2	-0.10	+4	
		0	0*	0.2	+0.09	+5	

- Simultaneous burden on the other secondary winding

Date: 26/07/2001
Temperature:30°C

2. ACCURACY TEST RESULTS AFTER IMPULSE WITHSTAND TEST AND AFTER FERRO-RESONANCE TEST

On apparatus n° : 01XQ0008-001-01

Appareil N° : Serial N° : Aparato N° :	Couplage et circuit Coupling and circuits Acoplamiento y Arrollamiento	Charge en VA et cos φ : 0.8 Burden in VA and Power factor Carga en VA Y cos φ : 1		Nombre de Un Times rated Primary Fracción de Un	Erreur de rapport en % Ratio error in % Error de relación en %	Déphasage en Minutes Phase error in minutes Desfasaje en Minutos	Observations Notes Oservaciones
	1a3 –1a1	40	40*	1.1	-0.01	+0.5	
				1	-0.01	+0.5	
				0.9	-0.02	+1	
		40	0*	1.1	+0.06	+1	
				1	0.05	+1	
				0.9	0.05	+1	
		10	0*	1.1	+0.14	+2	
				1	+0.13	+2	
				0.9	+0.13	+2.5	
		40	40*	0.2	-0.03	+4	
		0	0*	0.2	+0.16	+5	
	1a2 –1a1	40	40*	1.1	-0.10	0	
				1	-0.10	0	
				0.9	-0.10	0	
		40	0*	1.1	-0.03	+0.5	
				1	-0.03	+0.5	
				0.9	-0.03	+1	
		10	0*	1.1	+0.06	+2	
				1	+0.06	+2	
				0.9	+0.06	+2	
		40	40*	0.2	-0.11	+03.5	
		0	0*	0.2	+0.10	+5	

- Simultaneous burden on the other secondary winding

Date: 27/07/2001
Temperature: 30°C

ALSTOM T&D Transformateurs de Mesure SA
au capital de 14 000 000 F
Siège social : 51, avenue Jean Jaurès
BP 380 92541 Montrouge Cedex France
343 074 092 RCS Nanterre
APE 311 A - TVA FR 05 343 074 092

ALSTOM

CERTIFICAT D'ESSAI N° :
TEST CERTIFICATE N° : **26906**
PROTOCOLO DE PRUEBAS N° :

on apparatus n° : 01XQ0008-001-01

Appareil N° : Serial N° : Aparato N° :	Couplage et circuit Coupling and circuits Acoplamiento y Arrollamiento	Charge en VA et cos φ : 0.8 Burden in VA and Power factor Carga en VA Y cos φ : 1		Nombre de Un Times rated Primary Fracción de Un	Erreur de rapport en % Ratio error in % Error de relación en %	Déphasage en Minutes Phase error in minutes Desfasaje en Minutos	Observations Notes Oservaciones
	2a3 –2a1	40	40*	1.1	-0.02	+1.5	
				1	-0.02	+1.5	
				0.9	-0.02	+1.5	
		40	0*	1.1	+0.05	+2	
				1	+0.05	+2	
				0.9	+0.05	+2	
		10	0*	1.1	+0.13	+2.5	
				1	+0.13	+2.5	
				0.9	+0.13	+2.5	
		40	40*	0.2	-0.03	+5	
		0	0*	0.2	+0.17	+5	
	2a2 –2a1	40	40*	1.1	-0.10	+1	
				1	-0.11	+1	
				0.9	-0.11	+1	
		40	0*	1.1	-0.04	+1.5	
				1	-0.04	+1.5	
				0.9	-0.04	+2	
		10	0*	1.1	+0.06	+2	
				1	+0.06	+2.5	
				0.9	+0.06	+2.5	
		40	40*	0.2	-0.11	+4.5	
		0	0*	0.2	+0.10	+5	

- Simultaneous burden on the other secondary winding

Date: 27/07/2001
Temperature:30°C

Circle diagrams have been constructed from the test results for each secondary winding for the rated accuracy burden, with a 1.0 power factor and extrapolated for a 0.8 PF.
The points of accuracy results taken in consideration are:

Winding	Burden in VA –cos φ: 1.0	Times rated primary	Ratio error in %	Phase error in c.rad
1a3-1a1	40	1	+0.05	+0.029
	10	1	+0.13	+0.058
1a2-1a1	40	1	-0.03	+0.0145
	10	1	+0.06	+0.058
2a3-2a1	40	1	+0.05	+0.058
	10	1	+0.13	+0.0726
2a2-2a1	40	1	-0.04	+0.0436
	10	1	+0.06	+0.0726

See diagrams in annex.

3. TEST FOR ACCURACY AT EXTREMES OF FREQUENCY RANGE

Test with unit power factor burdens

On apparatus n° : 01XQ0008-001-01

Appareil N° : Serial N° : Aparato N° :	Couplage et circuit Coupling and circuits Acoplamiento y Arrollamiento	Charge en VA et cos φ : 0.8 Burden in VA and Power factor Carga en VA Y cos φ : 1		Nombre de Un Times rated Primary Fracción de Un	Erreur de rapport en % Ratio error in % Error de relación en %	Déphasage en Minutes Phase error in minutes Desfasaje en Minutos	Observations Notes Oservaciones
49.5 Hz	1a3 –1a1	40	40*	1.1	0	+3.5	
				1	-0.01	+3.5	
				0.9	-0.01	+3.5	
		40	0*	1.1	+0.07	+3.5	
				1	+0.07	+3	
				0.9	+0.06	+3.5	
		10	0*	1.1	+0.16	+4	
				1	+0.15	+4	
				0.9	+0.15	+4	
	1a2 –1a1	40	40*	1.1	-0.07	+3	
				1	-0.08	+3	
				0.9	-0.09	+2.5	
		40	0*	1.1	-0.01	+2.5	
				1	-0.01	+3	
				0.9	-0.02	+3	
		10	0*	1.1	+0.08	+3.5	
				1	+0.08	+3.5	
				0.9	+0.07	+3.5	
49.5 Hz	2a3 –2a1	40	40*	1.1	0	+4.5	
				1	-0.01	+4.5	
				0.9	-0.01	+4.5	
		40	0*	1.1	+0.07	+4	
				1	+0.06	+4	
				0.9	+0.06	+4	
		10	0*	1.1	+0.16	+4	
				1	+0.16	+4	
				0.9	+0.15	+4	
	2a2 –2a1	40	40*	1.1	-0.09	+3.5	
				1	-0.09	+3.5	
				0.9	-0.09	+4	
		40	0*	1.1	-0.01	+3.5	
				1	-0.02	+3.5	
				0.9	-0.03	+3.5	
		10	0*	1.1	+0.08	+3.5	
				1	+0.07	+3.5	
				0.9	+0.07	+4	

- Simultaneous burden on the other secondary winding

Date: 27/07/2001
Temperature: 30°C

ALSTOM

ALSTOM T&D Transformateurs de Mesure SA
au capital de 14 000 000 F
Siège social : 51, avenue Jean Jaurès
BP 380 92541 Montrouge Cedex France
343 074 092 RCS Nanterre
APE 311 A - TVA FR 05 343 074 092

Test with unit power factor burdens

On apparatus n° : 01XQ0008-001-01

Appareil N° : Serial N° : Aparato N° :	Couplage et circuit Coupling and circuits Acoplamiento y Arrollamiento	Charge en VA et cos φ : 0.8 Burden in VA and Power factor Carga en VA Y cos φ : 1		Nombre de Un Times rated Primary Fracción de Un	Erreur de rapport en % Ratio error in % Error de relación en %	Déphasage en Minutes Phase error in minutes Desfasaje en Minutos	Observations Notes Oservaciones
50.5 Hz	1a3 –1a1	40	40*	1.1	-0.01	-2	
				1	-0.01	-2	
				0.9	-0.01	-2.5	
		40	0*	1.1	+0.07	-1	
				1	+0.07	-1	
				0.9	+0.06	-1	
		10	0*	1.1	+0.15	+0.5	
				1	+0.15	+0.5	
				0.9	+0.14	+1	
	1a2 –1a1	40	40*	1.1	-0.08	-3	
				1	-0.09	-3	
				0.9	-0.09	-3	
		40	0*	1.1	-0.02	-5	
				1	-0.02	-5	
				0.9	-0.02	-1.5	
		10	0*	1.1	+0.07	+0.5	
				1	+0.07	+0.5	
				0.9	+0.07	+0.5	
50.5 Hz	2a3 –2a1	40	40*	1.1	0	-1	
				1	-0.01	-1	
				0.9	-0.01	-1	
		40	0*	1.1	+0.06	0	
				1	+0.06	0	
				0.9	+0.05	0	
		10	0*	1.1	+0.15	+1	
				1	0.15	+1	
				0.9	+0.14	+1	
	2a2 –2a1	40	40*	1.1	-0.09	-1.5	
				1	-0.10	-2	
				0.9	-0.10	-2	
		40	0*	1.1	-0.02	-0.5	
				1	-0.03	0	
				0.9	-0.03	-0.5	
		10	0*	1.1	+0.07	+1	
				1	+0.07	+1	
				0.9	+0.07	+1	

- Simultaneous burden on the other secondary winding

Date: 27/07/2001
Temperature: 30°C

Test is satisfactory

ALSTOM

ALSTOM T&D Transformateurs de Mesure SA
au capital de 14 000 000 F
Siège social : 51, avenue Jean Jaurès
BP 380 92541 Montrouge Cedex France
343 074 092 RCS Nanterre
APE 311 A - TVA FR 05 343 074 092

Test with 0.8 power factor burden

On apparatus n° : 01XQ0008-001-01

Appareil N° : Serial N° : Aparato N° :	Couplage et circuit Coupling and circuits Acoplamiento y Arrollamiento	Charge en VA et cos φ : 0.8 Burden in VA and Power factor Carga en VA Y cos φ : 0.8		Nombre de Un Times rated Primary Fracción de Un	Erreur de rapport en % Ratio error in % Error de relación en %	Déphasage en Minutes Phase error in minutes Desfasaje en Minutos	Observations Notes Oservaciones
49.5 Hz	1a3 –1a1	40	40*	1.1	-0.03	+7	
				1	-0.03	+7	
				0.9	-0.03	+7	
		40	0*	1.1	+0.02	+5.5	
				1	+0.02	+5.5	
				0.9	+0.02	+5.5	
		10	0*	1.1	+0.10	+4.5	
				1	+0.09	+4.5	
				0.9	+0.09	+4.5	
	1a2 –1a1	40	40*	1.1	-0.12	+7	
				1	-0.13	+6.5	
				0.9	-0.13	+6.5	
		40	0*	1.1	-0.06	+5.5	
				1	-0.07	+5.5	
				0.9	-0.08	+5	
		10	0*	1.1	+0.02	+4	
				1	+0.02	+4	
				0.9	+0.02	+4.5	
49.5 Hz	2a3 –2a1	40	40*	1.1	-0.02	+8	
				1	-0.02	+8	
				0.9	-0.02	+8	
		40	0*	1.1	+0.03	+6.5	
				1	+0.03	+6.5	
				0.9	+0.02	+6.5	
		10	0*	1.1	+0.10	+4.5	
				1	+0.10	+4.5	
				0.9	+0.09	+5	
	2a2 –2a1	40	40*	1.1	-0.11	+7.5	
				1	-0.12	+7.5	
				0.9	-0.12	+8	
		40	0*	1.1	-0.06	+6	
				1	-0.07	+6	
				0.9	-0.06	+6.5	
		10	0*	1.1	+0.02	+4	
				1	+0.02	+4.5	
				0.9	+0.01	+4.5	

- Simultaneous burden on the other secondary winding

Date: 27/07/2001
Temperature: 30°C

ALSTOM

ALSTOM T&D Transformateurs de Mesure SA
au capital de 14 000 000 F
Siège social : 51, avenue Jean Jaures
BP 380 92541 Montrouge Cedex France
343 074 092 RCS Nanterre
APE 311 A - TVA FR 05 343 074 092

CERTIFICAT D'ESSAI N° :
TEST CERTIFICATE N° : **26906**
PROTOCOLO DE PRUEBAS N° :

Test with 0.8 power factor burden

On apparatus n° : 01XQ0008-001-01

Appareil N° : Serial N° : Aparato N° :	Couplage et circuit Coupling and circuits Acoplamiento y Arrollamiento	Charge en VA et cos φ : 0.8 Burden in VA and Power factor Carga en VA Y cos φ : 0.8		Nombre de Un Times rated Primary Fracción de Un	Erreur de rapport en % Ratio error in % Error de relación en %	Déphasage en Minutes Phase error in minutes Desfasaje en Minutos	Observations Notes Oservaciones
50.5 Hz	1a3 –1a1	40	40*	1.1	-0.08	+2	
				1	-0.09	+2	
				0.9	-0.09	+2	
		40	0*	1.1	-0.01	+2	
				1	-0.01	+2	
				0.9	-0.01	+2	
		10	0*	1.1	+0.08	+1.5	
				1	+0.08	+1.5	
				0.9	+0.08	+1.5	
	1a2 –1a1	40	40*	1.1	-0.17	+2	
				1	-0.17	+2	
				0.9	-0.17	+2	
		40	0*	1.1	-0.10	+2	
				1	-0.10	+2	
				0.9	-0.10	+2	
		10	0*	1.1	+0.01	+1	
				1	+0.01	+1	
				0.9	+0.01	+1.5	
50.5 Hz	2a3 –2a1	40	40*	1.1	-0.07	+2.5	
				1	-0.07	+2.5	
				0.9	-0.07	+3	
		40	0*	1.1	+0.01	+2.5	
				1	0	+2.5	
				0.9	-0.01	+2.5	
		10	0*	1.1	+0.08	+1.5	
				1	+0.09	+1.5	
				0.9	+0.08	+1.5	
	2a2 –2a1	40	40*	1.1	-0.16	+2.5	
				1	-0.17	+2.5	
				0.9	-0.17	+2.5	
		40	0*	1.1	-0.08	+2.5	
				1	-0.09	+2.5	
				0.9	-0.10	+2.5	
		10	0*	1.1	+0.01	+1.5	
				1	+0.01	+1.5	
				0.9	-0.01	+1.5	

- Simultaneous burden on the other secondary winding

Date: 27/07/2001
Temperature: 30°C

4. TEST FOR ACCURACY AT EXTREMES OF TEMPERATURE RANGE

The results for accuracy at extremes of temperature, have been calculated, using the results measured on routine accuracy test at ambient temperature of 30 °C.

2a3-2a1

110.0 V 40.0 VA CL: .2 -25.0 DEGR. 50.0 HZ

U/VA	10.0		40.0		40.0+ 40.0	
	1		2		3	
1 1.10*UN	.151	1.1	.078	.7	.019	-.1
2 1.00*UN	.150	1.0	.078	.6	.022	-.2
3 .90*UN	.149	1.1	.077	.5	.021	-.2

110.0 V 40.0 VA CL: .2 20.0 DEGR. 50.0 HZ

U/VA	10.0		40.0		40.0+ 40.0	
	1		2		3	
1 1.10*UN	.136	1.9	.050	1.8	-.018	1.3
2 1.00*UN	.134	1.8	.049	1.6	-.016	1.2
3 .90*UN	.133	1.9	.048	1.6	-.017	1.2

110.0 V 40.0 VA CL: .2 30.0 DEGR. 50.0 HZ

U/VA	10.0		40.0		40.0+ 40.0	
	1		2		3	
1 1.10*UN	.132	2.1	.044	2.1	-.026	1.7
2 1.00*UN	.130	2.0	.042	1.9	-.025	1.6
3 .90*UN	.129	2.1	.041	1.8	-.026	1.6
4 1.00*UN	**.130**	**2.5**	**+.050**	**2**	**-.020**	**1.5***

***(the accuracy test results)**

110.0 V 40.0 VA CL: .2 40.0 DEGR. 50.0 HZ

U/VA	10.0		40.0		40.0+ 40.0	
	1		2		3	
1 1.10*UN	.129	2.4	.038	2.4	-.035	2.2
2 1.00*UN	.126	2.3	.036	2.2	-.033	2.0
3 .90*UN	.125	2.3	.035	2.2	-.034	2.1

2a2-2a1

63.5 V 40.0 VA CL: .2 -25.0 DEGR. 50.0 HZ

U/VA	10.0		40.0		40.0+ 40.0	
	1		2		3	
1 1.10*UN	.073	1.0	-.010	.4	-.069	-.5
2 1.00*UN	.071	1.0	-.010	.3	-.066	-.6
3 .90*UN	.071	1.0	-.010	.3	-.067	-.6

63.5 V 40.0 VA CL: .2 20.0 DEGR. 50.0 HZ

U/VA	10.0		40.0		40.0+ 40.0	
	1		2		3	
1 1.10*UN	.057	1.8	-.040	1.5	-.108	.9
2 1.00*UN	.055	1.7	-.042	1.4	-.106	.8
3 .90*UN	.054	1.8	-.042	1.3	-.107	.8

63.5 V 40.0 VA CL: .2 30.0 DEGR. 50.0 HZ

U/VA	10.0		40.0		40.0+ 40.0		
	1		2		3		
1 1.10*UN	.053	2.0	-.047	1.8	-.117	1.3	
2 1.00*UN	.051	1.9	-.049	1.6	-.116	1.1	
3 .90*UN	.050	2.0	-.049	1.6	-.117	1.2	
4 1.00*UN	**.060**	**2.5**	**-.040**	**1.5**	**-.110**	**1**	*

***(results of the accuracy test)**

63.5 V 40.0 VA CL: .2 40.0 DEGR. 50.0 HZ

U/VA	10.0		40.0		40.0+ 40.0	
	1		2		3	
1 1.10*UN	.050	2.3	-.054	2.2	-.126	1.8
2 1.00*UN	.047	2.2	-.056	2.0	-.125	1.6
3 .90*UN	.046	2.3	-.057	2.0	-.126	1.6

1a3-1a1

110.0 V 40.0 VA CL: .2 -25.0 DEGR. 50.0 HZ

U/VA	10.0		40.0		40.0+ 40.0	
	1		2		3	
1 1.10*UN	.149	.8	.079	-.2	.020	-1.0
2 1.00*UN	.148	.7	.078	-.4	.022	-1.1
3 .90*UN	.147	.8	.078	-.4	.022	-1.1

110.0 V 40.0 VA CL: .2 20.0 DEGR. 50.0 HZ

U/VA	10.0		40.0		40.0+ 40.0	
	1		2		3	
1 1.10*UN	.134	1.6	.052	.8	-.016	.4
2 1.00*UN	.132	1.5	.050	.7	-.014	.3
3 .90*UN	.131	1.6	.050	.6	-.015	.3

110.0 V 40.0 VA CL: .2 30.0 DEGR. 50.0 HZ

U/VA	10.0		40.0		40.0+ 40.0	
	1		2		3	
1 1.10*UN	.130	1.8	.046	1.1	-.024	.8
2 1.00*UN	.128	1.7	.044	1.0	-.023	.6
3 .90*UN	.127	1.8	.043	.9	-.024	.7
4 1.00*UN	**.130**	**2**	**.050**	**1**	**-.010**	**.5 ***

***(results of the accuracy test)**

110.0 V 40.0 VA CL: .2 40.0 DEGR. 50.0 HZ

U/VA	10.0		40.0		40.0+ 40.0	
	1		2		3	
1 1.10*UN	.127	2.1	.040	1.5	-.032	1.3
2 1.00*UN	.125	2.0	.038	1.3	-.031	1.1
3 .90*UN	.123	2.1	.037	1.3	-.033	1.1

1a2-1a1

63.5 V 40.0 VA CL: .2 -25.0 DEGR. 50.0 HZ

U/VA	10.0		40.0		40.0+ 40.0	
	1		2		3	
1 1.10*UN	.071	.8	-.007	-.4	-.067	-1.2
2 1.00*UN	.070	.7	-.008	-.6	-.064	-1.3
3 .90*UN	.069	.8	-.008	-.6	-.064	-1.3

63.5 V 40.0 VA CL: .2 20.0 DEGR. 50.0 HZ

U/VA	10.0		40.0		40.0+ 40.0	
	1		2		3	
1 1.10*UN	.055	1.6	-.037	.6	-.105	.2
2 1.00*UN	.053	1.5	-.038	.5	-.103	.1
3 .90*UN	.052	1.5	-.039	.4	-.104	.1

63.5 V 40.0 VA CL: .2 30.0 DEGR. 50.0 HZ

U/VA	10.0		40.0		40.0+ 40.0	
	1		2		3	
1 1.10*UN	.052	1.8	-.043	.9	-.113	.6
2 1.00*UN	.049	1.7	-.045	.8	-.112	.4
3 .90*UN	.048	1.7	-.046	.7	-.113	.5
4 1.00*UN	**.060**	**2**	**-.030**	**.5**	**-.100**	**0**

***(results of the accuracy test)**

63.5 V 40.0 VA CL: .2 40.0 DEGR. 50.0 HZ

U/VA	10.0		40.0		40.0+ 40.0	
	1		2		3	
1 1.10*UN	.049	2.1	-.050	1.3	-.122	1.1
2 1.00*UN	.046	1.9	-.052	1.1	-.121	.9
3 .90*UN	.044	2.0	-.053	1.1	-.122	.9

The results are satisfactory.

5. IMPEDANCE OF SECONDARY WINDINGS

The primary winding is short-circuited and each secondary is measured at 50 Hz.
The current applied is this corresponding to the current which appears when the rated burden is connected to the corresponding secondary winding.

Winding	U in V	I in A	Z in Ω
1a3 – 1a1	0.16	0.379	0.422
1a2 – 1a 1	0.116	0.63	0.184
2a3 – 2a1	0.169	0.386	0.437
2a2 – 2a1	0.121	0.64	0.189

6. MEASURE OF THE SECONDARY SHORT-CIRCUIT CURRENT

The secondary short-circuit current has been measured on each secondary winding using the same diagram that the one used for the ferro-resonance test. A 20 mΩ shunt is used to measure the current.

Results are:

Winding	I RMS in A
1a3 – 1a1	56
1a2 – 1a 1	80
2a3 – 2a1	52
2a2 – 2a1	82

Diagram used:

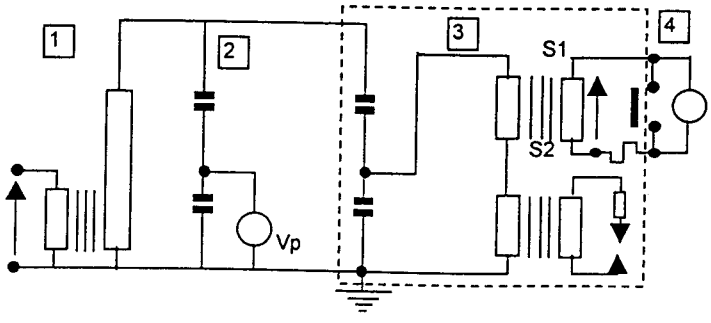

1-	Elévateur de tension	Step-up transformer
2-	Diviseur capacitif	Capacitor divider
3-	Transformateur condensateur de tension en essai	CVT under test
4-	Ensemble electromagnétique	Electromagnetic unit
5-	Contacteur	Contactor

7. TRANSIENT RESPONSE TEST

DESCRIPTION

The test is performed according to AS 1243 (1982).
The transient response test is performed on the capacitor voltage transformer connected for the equivalent circuit of THEVENIN.
Capacitors C1 and C2 of the divider are of the same construction (identical elements contained in 1 or 2 capacitor units). Their measured capacitance are:

C1 = 3 265 pF C2 = 72 377 pF

The rated primary voltage for the equivalent circuit Up results from measured capacitance values:

Up= 288675x (3265/ (3265+72377) = 12460 Volts.

DIAGRAM:

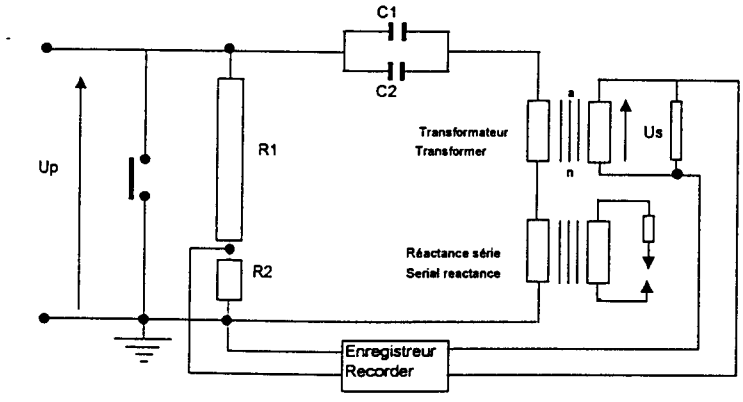

A synchronous closer ensures the short-circuiting of the high voltage at the zero passage or at the peak of the primary voltage.
Up is given by a HV resistive divider (R1/R2).
Measurements are performed on secondary 1a3 – 1a1. The burdens used are of series type and have a unit power factor secondary voltage Us and primary voltage Up are recorded.
The capacitor voltage transformer is operated at rated primary voltage.
The test is performed twice at the zero passage and twice at the peak of the primary voltage at 25%, 100% of rated burden (40 VA).

TRANSIENT RESPONSE RESULTS

VA φ 1	Zero passage 1 Error in %	Zero passage 2 Error in %	Peak value 1 Error in %	Peak value 2 Error in %
40	3.8	3.8	< 1	<1
10	4.2	4.2	< 1	< 1

CONCLUSION

20 ms after the short-circuit, the secondary output voltage must be less than 10% of the peak value before the short-circuit.
The transient response test results are **conform** to AS 1243 requirement:
See recordings in annex .

8. TOTAL HARMONICS DISTORSION

The diagram used is the equivalent circuit of THEVENIN. An as pure as possible 50 Hz sinusoidal voltage of 1.1 times the rated value, is applied to the primary winding. The RMS sum of all frequency components above 51 Hz in the output voltage waveform of each secondary winding shall not exceed 0.5 percent.
This test has been performed using an analyser type : Stanford Research System SR 770 FFT network Analyser, which deliver the total harmonic distortion in %.
Test has been delivered for all the points of the following table an analysed to the 25th harmonic order:

1a3-1a1	**N° test**	**Burden on 1a3 – 1a1**	**Burden on 2a3 – 2a1**	**THD on primary**	**THD on secondary**	**THD Limit**
110 V*1.1		in VA	in VA	In %	In %	In %
	1	0 VA	0 VA	0.266	0.381	0.50
	2	10 VA	0 VA	0.263	0.371	0.50
	3	40 VA	0 VA	0.262	0.370	0.50
	4	0 VA	40 VA	0.26	0.369	0.50
	5	10 VA	40 VA	0.256	0.362	0.50
	6	40 VA	40 VA	0.25	0.350	0.50
1a2-1a1		**Burden on 1a2 – 1a1**	**Burden on 2a3 – 2a1**			
63.5 V*1.1	7	0 VA	0 VA	0.263	0.374	0.50
	8	10 VA	0 VA	0.262	0.366	0.50
	9	40 VA	0 VA	0.255	0.358	0.50
	10	0 VA	40 VA	0.258	0.356	0.50
	11	10 VA	40 VA	0.257	0.355	0.50
	12	40 VA	40 VA	0.246	0.341	0.50
2a3-2a1		**Burden on 2a3 – 2a1**	**Burden on 1a3 – 1a1**			
110 V*1.1	13	0 VA	0 VA	0.266	0.378	0.50
	14	10 VA	0 VA	0.263	0.374	0.50
	15	40 VA	0 VA	0.262	0.369	0.50
	16	0 VA	40 VA	0.26	0.366	0.50
	17	10 VA	40 VA	0.256	0.364	0.50
	18	40 VA	40 VA	0.25	0.351	0.50
2a2-2a1		**Burden on 2a2 – 2a1**	**Burden on 1a3 – 1a1**			
63.5 V*1.1	19	0 VA	0 VA	0.263	0.389	0.50
	20	10 VA	0 VA	0.262	0.384	0.50
	21	40 VA	0 VA	0.255	0.358	0.50
	22	0 VA	40 VA	0.258	0.362	0.50
	23	10 VA	40 VA	0.257	0.356	0.50
	24	40 VA	40 VA	0.246	0.339	0.50

In any case the total harmonic distortion is superior to 0.50 %, so the test is satisfactory.
See records in annex.

9. LIGHTNING IMPULSE WITHSTAND TEST

In accordance with the customer, the lightning impulse test was performed on two parts, on apparatus n°: XQ0008-001-01; first on the superior column capacitor and then on the inferior column capacitor and electromagnetic part.
The impulse wave is of the conventional form (approximately 1.2 / 50 μs) according to AS 1243, but a front time of up to 5 μs is acceptable to take into account the high value of the capacitance and the limitations of the testing equipment.
The high voltage is applied between the HV terminal (A), and the (A'1) and (A1) terminals connected to the mass. The LV windings are connected to the mass. The apparatus mass is grounded.
The impulse voltage is measured through a capacitive divider by an impulse voltmeter and recorded.
The current is measured across a wide band current transformer, and recorded.
Impulse voltage applied is calculated throu the corresponding capacitances values . It was determinated in 775 kV.
After calibration impulses at approximately half voltage and 387 kV,

- 5 negative full impulses at 775 kV, and
- 5 positive full impulses at 775 kV

have been applied to the apparatus.

TEST DIAGRAM

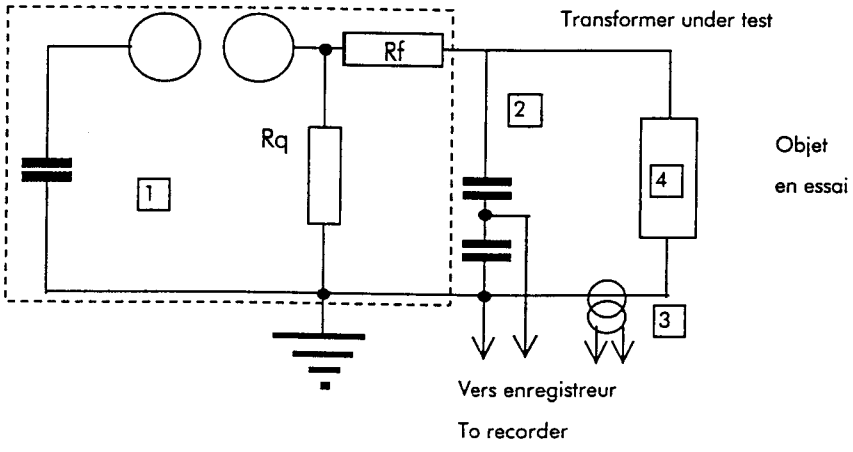

TEST RESULTS
Examination of the impulse voltage records shows that no internal or external flashover has occurred.
The accuracy measurement test taken before and after the test, show that no internal puncture has occurred.
See accuracy results on page: 5-6 , and impulse records in annex.

The non-significant accuracy measurements change ensures that no puncture has occurred.

The lightning impulse test is satisfactory.

10. SECONDARY SHORT-CIRCUIT TEST (FERRO-RESONANCE TEST)

TEST CONDITIONS

The short-circuit secondary test is carried out on a complete capacitor voltage transformer by short-circuiting the secondary terminals for at least 100 ms by means of a contactor.
The power source voltage Up is recorded through a high voltage capacitive divider. During short-circuit, the voltage of the power source does not differ by more than 10 % from the voltage before short-circuit and remains substantially sinusoidal.
The secondary voltage Vs is recorded with an high impedance equipment which represents a burden not exceeding 5 VA.
Short-circuit current is recorded through a shunt located in series in the short-circuit loop. The impedance of the short-circuit loop is sufficiently low so that the voltage drop over it, measured directly at the secondary terminals, is less than 10 % of the voltage before the short-circuit.

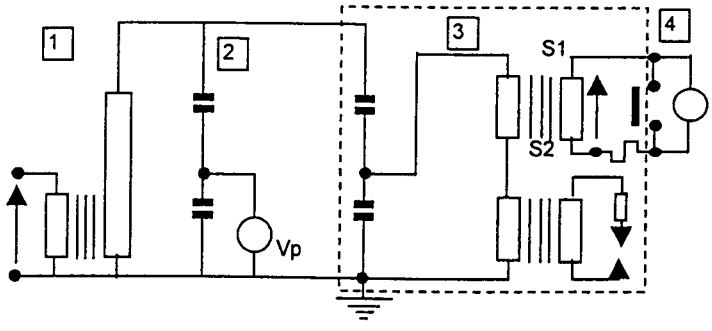

1-	Elévateur de tension	Step-up transformer
2-	Diviseur capacitif	Capacitor divider
3-	Transformateur condensateur de tension en essai	CVT under test
4-	Ensemble electromagnétique	Electromagnetic unit
5-	Contacteur	Contactor

TEST RESULTS

Test is carried as follows:

- 30 times at 120 % of the rated primary voltage with zero burden on secondary. 100 ms after the short-circuit is suddenly removed, the peak of the secondary voltage does not differ from its normal value by more than 10 %.
  The RMS value of the secondary voltage shall revert to within steady-state accuracy limits within 2s from the instant of removal of the short-circuit.
- 30 times at 110 % of the rated primary voltage with 25 % of rated burden unit power factor on secondary winding and zero burden on the other winding.
  At any time ,the peak value should not exceed 2.2 times the peak value of rated secondary voltage times Fv.

An accuracy test has been done after this test , there is no significant change (see results pages 5-6).
See recordings in annex.

Short-circuit secondary test is satisfactory.

11. DETERMINATION OF THE TEMPERATURE COEFFICIENT

Test is done according with IEC 358, on model capacitor of size suitable with the climatic encloser .
The model is composed with 18 elements having the same clamping construction as the capacitor under consideration.
The applied voltage for capacitance and loss angle tangent measurement is 16 kV at 50 Hz frequency.
Measurements are made at temperature of :

-40 , -25, -10, +5, +20, +35, +50, +65 °C

and after thermal stabilisation .
The voltage is applied to the capacitor only for the period time necessary for taking the measurements.

DIAGRAM USED

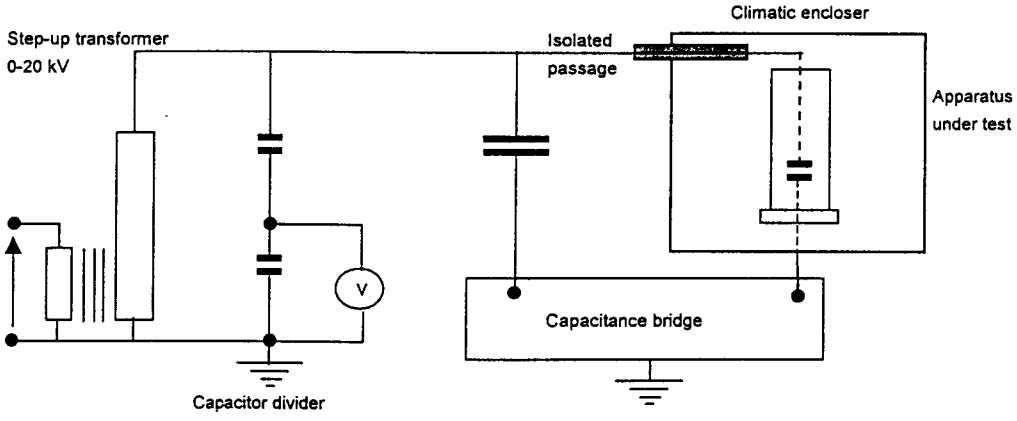

RESULTS

θ	Capacité pF	ΔC/C20 %	Tangente δ
°C	pF	%	10-3
20	36670	0.00	0.707
-40	37103	1.181	1.87
-24	37015	0.941	1.25
-10	36916	0.671	0.95
7	36786	0.316	0.77
21	36661	-0.025	0.71
35	36516	-0.420	0.68
49	36336	-0.911	0.70
65	36101	-1.552	0.78

The change of capacitance is approximately linear and average temperature coefficient is: – 2.6 x10 $^{-4}$

CAPACITANCE CHANGE VS TEMPERATURE PAPER+PPR+JARYLEC

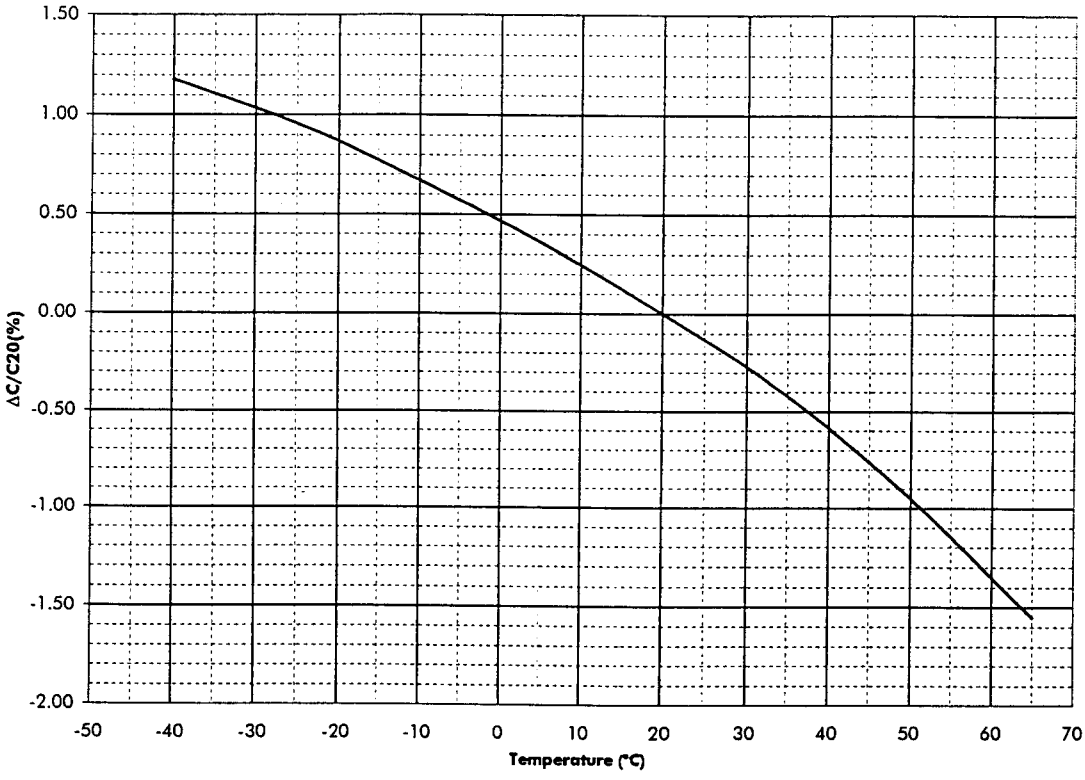
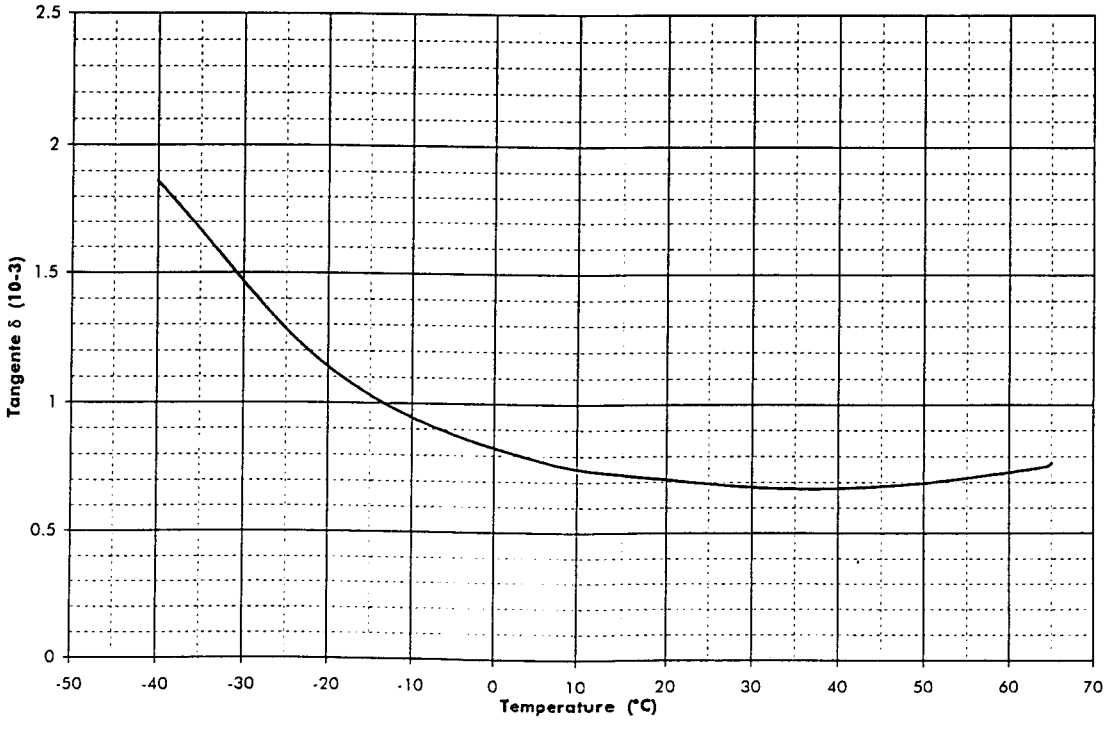
VARIATION OF TANGENTE δ VS TEMPERATURE Paper + PPR + JARYLEC