Medium-voltage switching devices Vacuum circuit-breaker

Selection list

ALSTOM

T&D
Medium Voltage Switchgear

Terms of Delivery
The General Terms of Delivery, as amended, shall apply.

Illustrations
The illustrations are not binding.

Introduction

General description

Vacuum circuit-breakers type VA., VX. for all applications in industrial plants and distribution networks

Vacuum circuit breakers types VA and VAA are frontmounted switches for installation in medium-voltage indoor switchgear. They may be fixed mounted in switchgear or on a switchgear truck, withdrawable drawer unit or cassette truck. In railway operation singlepole or two-pole vacuum circuit-breakers type VXA are employed. The vacuum circuit-breakers type VXC, which are designed for especially high mechanical and electrical switching cycles, are highly suitable for switching electrical smelting furnaces. Vacuum circuitbreakers are suitable for switching in all cases of need in industrial plants, distribution networks as well as in railway operation, particularly for switching:

short-circuit currents

cables and overhead lines

motors

transformers

generators

capacitors.

Features

- High number of mechanical and electrical switching cycles
- No critical current range
- Long life
- High switching capacity reserve
- Minimum maintenance

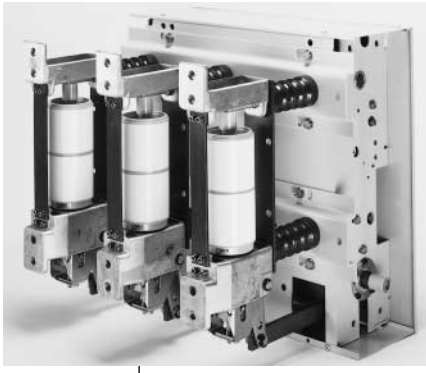

Vacuum circuit-breaker
type VAA,
rated voltage 12 kV,
rated short-circuit
breaking current 25 kA

Vacuum circuit-breaker
type VXA
rated voltage 17.5 kV
rated short-circuit
breaking current 31.5 kA

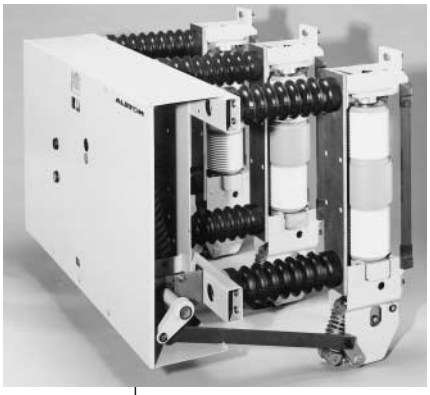

Vacuum circuit-breaker
type VXC (furnace switch)
rated voltage 36 kV
rated short-circuit
breaking current 25 kA

Use, construction, method of operation

Use

The vacuum circuit-breakers are front-mounted switches. The three-pole vacuum circuit-breakers types VA and VAA can handle all the cases of switching occurring in medium-voltage networks. Special requirements are complied with by vacuum circuit-breakers types VXA and VXB. Vacuum circuit-breakers type VXA are single-pole versions and type VXB are two-pole circuit-breakers supplied principally for operation on railways. Three-pole vacuum circuit-breakers, designed for up to 75,000 switching cycles, are employed where extremely high switching frequencies are involved, as furnace switches, for example.

The vacuum circuit-breakers may be fixed mounted in switchgear or be mounted on a cassette truck or switchgear truck.

Construction and method of operation

The switch poles with one switching chamber per phase are mounted on a common base frame with two cast resin post insulators each. All drive parts, auxiliary and release devices are situated inside the base frame constructed as a closed cabinet. Depending on requirements, the

Switchgear panel type WBB with vacuum circuit

vacuum circuit-breakers may be provided with auxiliary switches, auxiliary current releases, indirect overcurrent releases and under-voltage releases.

The vacuum circuit-breakers are fitted with an energy-storing drive for manual or electrical tensioning and optionally for fast auto-reclosure.

The force required for making and breaking is transmitted between energy storing device and switch poles by means of a hook stick made from high-quality glass-fibre reinforced insulating material, which is substantially unloaded when the vacuum circuit-breaker is made.

Switchgear panel type WBA
with vacuum circuit-breaker

Pole selection

The pole section features extremely rugged construction. Through strong supports the switching chamber is seated completely free from the effects of external forces. Due to this statically enclosed supporting system, the axial forces occurring on making and breaking act only on the contact system, and the switching chamber case remains unstressed. To ensure that the forces for making and breaking act precisely in the axial direction, the force is transmitted from the contact spring through a lever system with a floating lever on the moving contact.

Drive

The drive is designed as a spring-actuated energystoring drive. The make spring of the energy-storing drive is tensioned either by means of an electric motor integrated in the drive cabinet or manually by means of a plug-in crank. In the event of a failure of voltage for the electric motor, the spring may always be tensioned by means of the crank. During the making procedure the break spring is tensioned. After making has been performed, the now detensioned make spring may be tensioned automatically by the electric motor or manually. In this status the switch is ready for a switch sequence 0 - t' - CO. The tensioned make spring may be released either manually by pressing the make button or by means of an auxiliary make release incorporated in the drive cabinet. The break procedure is initiated by pressing the break button or by means of an auxiliary break release, under-voltage release or indirect overcurrent release.

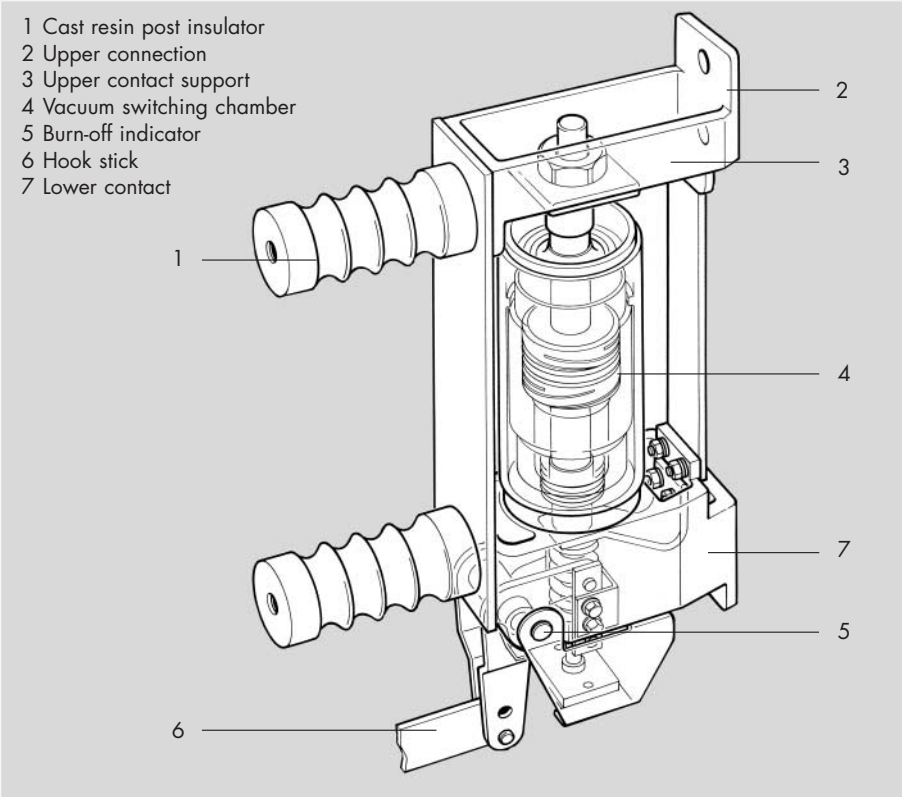

Construction of the switch pole types VA, VXC

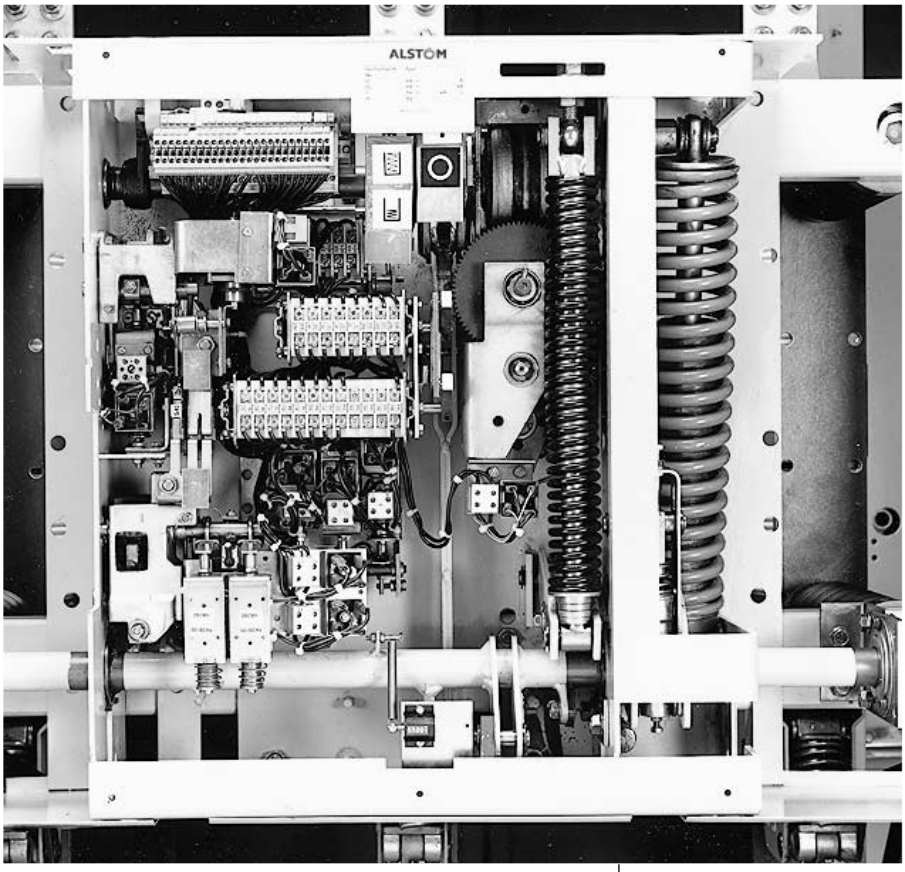

Drive of the vacuum circuit-breaker

The physical-technical principles for switching in vacuum

Breaking an AC current in a vacuum switching chamber

Breaking a current in an installation for the distribution of electrical power is always performed by separating two contact pieces of the circuit-breaker contact. An extremely high current density arises in the last contact bridge before final mechanical and thus galvanic separation of the contact pieces. During this event evaporation and ionisation take place of material, which originates from the electrode surface of the contact pieces. Thus, charge carriers are available between the electrodes. On breaking a short-circuit current such a high number of them are present that the short-circuit current continues to flow in unchanged magnitude at first. This phenomenon is called vacuum metal vapour arc.

The tendency of this vacuum metal vapour arc to resolve the initial concentration originating from the last contact bridge into a large number of partial arcs, is decisive for its suitability as a switching element. These partial arcs need only a relatively low driving voltage, which results in a reduced energy application.

The partial arcs move across the entire contact surface available, which remains relatively cold. When viewed optically the vacuum vapour arc in this state has a "diffuse" appearance and is therefore also called a "diffuse vacuum vapour arc". The partial arcs are extinguished one after the other according to their component of the current when the current drops, i.e. at the moment the sinusoidal alternating current approaches zero. The generation of charge carriers is proportional to the momentary current magnitude. When the last partial arc is extinguished, the electrical conductivity of the breaker gap is reduced at a velocity which corresponds to the diffusion velocity of the charge carriers in the electrical field between the breaker contacts.

Without exploiting further physical effects the diffuse arc mode described above is restricted to momentary current ratings of 10 kA approximately. At higher currents a more concentrated type of discharge of the metal vapour arc occurs. Peak events take place between the charge carriers, which considerably increase the energy conversion of the discharge. A the same time large areas of the breaker contact surface evaporate and metal vapour enters the space between the breaker contacts. This event still takes place during the natural zero also due to the thermal delay, and breaking would no longer be possible under the effect of recovery voltage in this situation because the charge carrier concentration in the breaker gap is still too high.

Therefore, the breaker contacts are so structured that the arc is so guided that a magnetic field is produced, which causes the arc to rotate. On decreasing arc current, just before the natural current zero transit, the contracted arc assumes a diffuse discharge mode once more.

At even higher break currents a further contact principle has proved its value, the AMF (axial magnetic field) contact.

Vacuum switching contact with axial magnetic field

It is a physical phenomenon that the diffuse mode of a vacuum vapour arc is stabilised by a magnetic field, whose magnetic field orientation corresponds to the discharge orientation of the vacuum vapour arc. This axial magnetic field produces a so-called cyclotron effect. The charged particles are driven into spiral paths of narrow diameter so that filiform discharges are caused between the contact pieces. The discharge of the metal vapour arc therefore takes place exclusively in the cylindrical space which is limited by the two switching contact surfaces.

Under exploitation of the effect of an axial magnetic field the vacuum vapour arc could be developed to an almost "ideal" switching device even for higher current ratings.

The axial magnetic field of the vacuum switching chamber

The physical phenomenon described above of the positive influencing of the arc by an axial magnetic field was explolted in two ways on the development of the ALSTOM vacuum switching chambers.

By exploiting this effect the contact dimensions could be clearly reduced but maintaining the performance data. This allowed the implementation of especially compact chamber design and the materiaiisation of a general-purpose vacuum switching chamber for distribution networks.

By means of the axial field contact system the physical limits of the transversal magnetic field contacts could be clearly undercut. This again led to the materialisation of vacuum switching chambers for the most stringent performance requirements.

Rated short-circuit breaking current and partial load currents

In high-duty test shops in Germany and abroad numerous series of test switchings were performed to determine the switching capacity of the different circuit-breaker types. Apart from registering the breaking current and recovery voltage by oscilloscope, special value was attached to recording further important physical data such as arc power, arc voltage and time-path processes. By reference to tbese data far-reaching knowledge is available in respect of optimum dimensioning and for progressive technical im-provements.

Unbalanced breaking currents

If in a circuit-breaker the contacts are separated in the event of a short-circuit during the phase of the decaying DC component of the initial short-circuit alternating current, the switching device must be able to handle a current whose peak rating is higher than the DC component.

A higher load on the switching chambers is caused by alternating currents containing a DC component. Suitability was demonstrated in special tests of breakers featuring short break times.

Fast auto-reclosure

A very high proportion of network interferences are caused by arcing short-circuits on overhead lines such as may occur through thunderstorms, gales or animals. Such interferences are generally temporary and are followed by fast dielectric recovery after breaking of the short-circuit current so that remaking make take place after an interval of 0.2 to 0.3 seconds. Our breakers allow such short intervals between breaking and making even in the presence of the full short-circuit current, and network operation is virtually not impaired. If the short-circuit still exists on remaking, it is definitely removed by a subsequent breaking.

Due to the dielectric vacuum a far higher number of consecutive switching cycles may be performed in a vacuum circuit-breaker than with all other switching principles employed at the present time, Thus, the switching sequences specified abroad such as 0 - 0.3 sec - CO - 15 sec - CO - 15 sec - CO (worst case of reclosing cycles in compliance with ANSI C37) may be performed without difficulty even at high short-circuit currents and several times in succession.

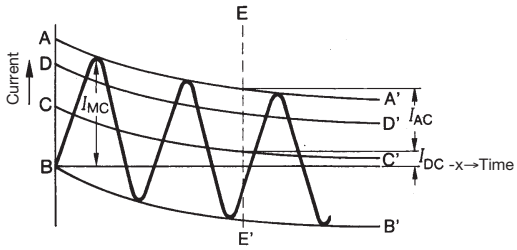

Percentage value of DC component in % = $\frac{I_{DC} \cdot 100}{I_{AC}}$

AA', BB'	Envelope curves of current
BX	Zero line
CC'	Momentary rating of DC component
DD'	Momentary rms rating of AC component measured from CC'
EE'	Time of contact separation (arc ignition)
I_{MC}	Making current
I_{AC}	Peak rating of AC component at time EE'

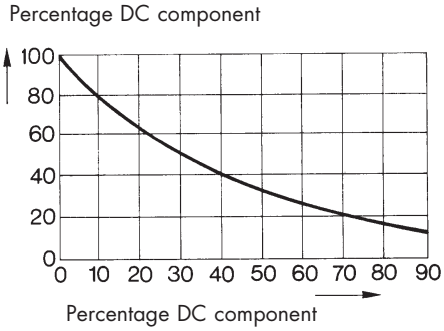

Percentage DC component at a time constant of 45 msec. (normal case)

G	=	Generator
MB	=	Safety switch
MS	=	Making switch
T	=	Transformer
TO	=	Unit for test
C	=	Capacitor
L	=	Coil
R	=	Resistor
ib	=	Switching current
ug	=	Generator voltage
ut	=	Recovery voltage
utrv	=	Restriking voltage

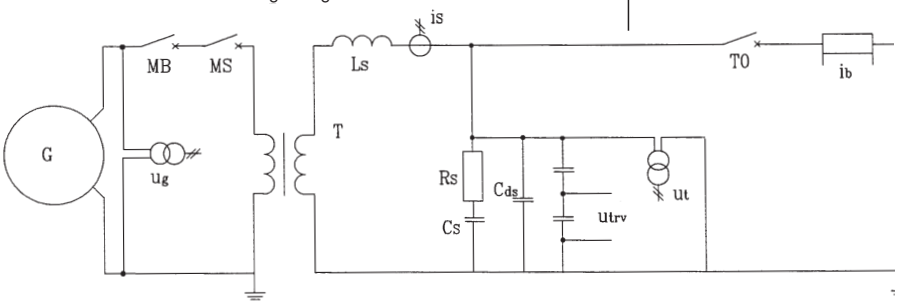

Basic circuit diagram for power tests

Breaking short-circuit currents with very high initial rise times of the restriking voltage

On breaking short-circuit currents with the defect point immediately behind high inductances (e.g. transformers), the initial rise times of the restriking voltage may be far higher than the ratings specified in DIN VDE 0670 and IEC 56. Rise times up to some kV/µsec. may be reached on breaking. It is a special peculiarity of vacuum circuit-breakers that they can cope with extremely short rise times.

Breaking transformers under no-load

Thanks to the choice of materials, the chopping current is very low (3 A to 5 A) in our circuit-breakers. The overvoltages to be expected on disconnecting transformers not under load are below the ratings which could arise in other switching principles, i.e. overvoltage limiting measures are not necessary.

Breaking under double earth fault conditions

In this case a maximum short-circuit current results, which corresponds to √3/2 times the value of the maximum three-pole short-circuit current.

Switching unloaded cables and overhead lines

In networks with an isolated star point in the event of earth fault a recovery pole voltage approximately 1.4 times higher may result in the first phase to extinguish in addition to the physical events as with concentrated capacitances, which are the same in principle.

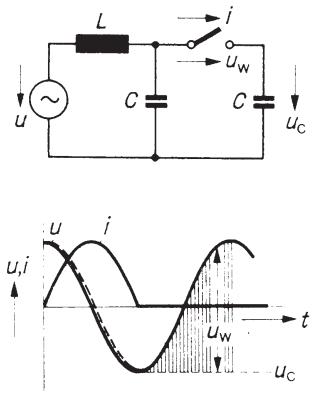

	Switching capacitances (unloaded cables and overhead lines)
$\hat{U}_W$	Peak rating of recovery voltage
U	Rated voltage
i	Overhead line or cable break current
U_C	Voltage across cable capacitance
L	Inductance
C	Capacitance of overhead line or cable
t	Time

In the single-phase circuit the recovery voltage follows:
$\hat{U}_w = 2 \cdot \sqrt{2} \cdot U$

Switching motors with air gap containing inductances

On switching low-power high-voltage motors which are running up or are at a standstill, switching overvoltages occur by virtue of the specific single-phase chopping events in vacuum circuit-breakers. Irrespective of type and manufacturer, by virtue of the breaking principle in vacuum circuit-breakers, a limitation of the overvoltage must be performed by means of ZnO arresters which are highly suitable for the purpose.

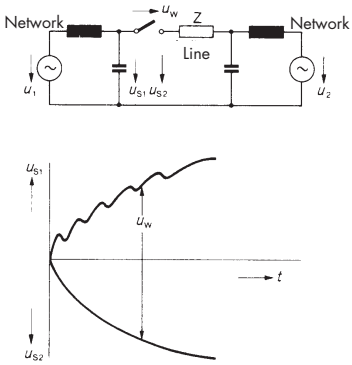

	Breaking under conditions of phase opposition
U_W	Service frequency recovery voltage
U_1, U_2	Rated voltage of networks
U_{S1}, U_{S2}	Voltages at the two switch sides
Z	Impedance

Breaking under conditions of phase opposition

The basic network conditions on phase opposition are shown in the basic diagram for a single pole. Attention must be drawn to the high recovery voltage in this case, which is caused by the asynchronous voltage curve of the two network parts.

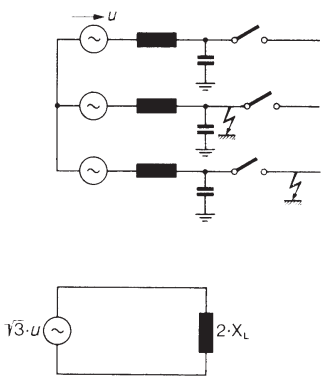

	Breaking under double earth fault conditions
U	Rated voltage
X_L	Reactance at load end

Switching of capacitor banks

Vacuum circuit-breakers are designed especially for switching in the capacitive current circuit. They can disconnect capacitors up to the highest battery power without restriking and thus without overvoltages.

The problem of switching capacitive loads consists of handling relatively high restriking voltage ratings. The dielectric strength of the extinguishing gap must be reestablished immediately after extinguishing the capacitive current so quickly that the restriking voltage resulting from the sum of remaining DC voltage at network frequency and at the disconnected capacitance does not cause break down of the quenching gap or cause the occurrence of inadmissible overoltages in the loads.

In the case that one or several capacitors shall be connected parallel to a capacitor bank already connected to voltage, high-frequency adaptation events take place between the battery systems with high peak currents, which could constitute a higher load for the quenching chambers than the current load on switching short-circuits, a case of switching to which special attention must be paid on the design of the switching chambers.

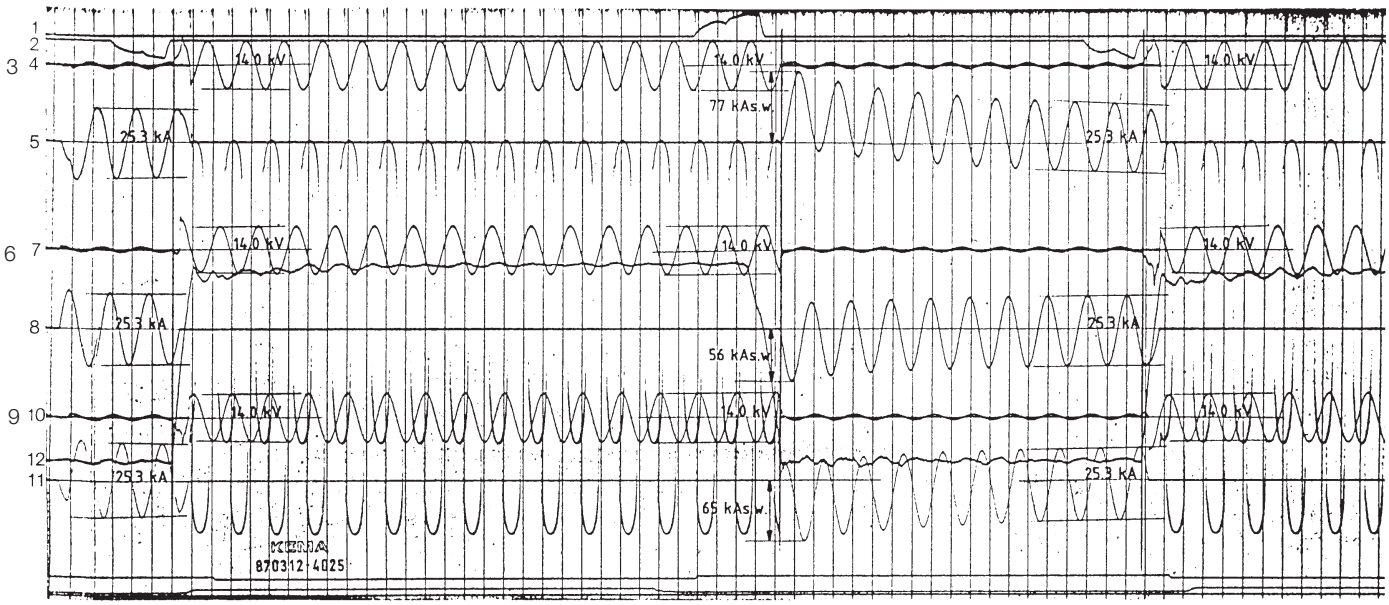

Oscilogram of a short-circuit test sequence 0 - 0.3 sec. - CO

1 Coil current of service current release MAKE
2 Coil current of service current release BREAK
3 Recovery voltage phase L1-earth
4 Arcing voltage phase L1-earth
5 Short-circuit breaking current phase Lt
6 Recovery voltage phase L2 -earth
7 Arcing voltage phase L2 - earth
8 Short-circuit breaking current phase L2
9 Recovery voltage L3 - earth
10 Arcing voltage phase L3 - earth
11 Short-circuit breaking current phase L3
12 Time-travel diagram

Vacuum circuit-breakers with fast auto-reclosure

All vacuum circuit-breakers may be fitted with fast auto-reclosure.

Method of operation
When a short-circuit occurs an overcurrent relay applies a pulse to the auxiliary break release after the preset short switching time and the breaker is disconnected.

On expiry of the preset interval a make instruction is applied through a normally-open contact of the relay for fast reclosure to the auxiliary make release.

If the short-circuit is still present a further "Break" instruction is applied by the overcurrent relay and the breaker is finally disconnected. A further make instruction is not generated by the relay for fast reclosure.

Rated switching sequences

Rated switching sequences	Designation	Regulations	Remarks	
0–3 min – CO – 3 min – CO	without fast auto-reclosure	DIN VDE, IEC 56	Cf. selection tables	
0–0.3s – CO – 3 min – CO	with fast auto-reclosure	DIN VDE, IEC 56	Cf. selection tables	
CO – 15s – CO		DIN VDE, IEC, ANSI-Standard C37	Cf. selection tables column "with fast auto-reclosure"	
0-0.3s – CO – 15s - CO up to 0-0.3s – CO – 15s - CO – 15s – CO – 15s – CO	reclosing cycles	ANSI-Standard C37	on enquiry	
0-15s –C'O – 15s – C'O - 15s – C'O – 15s – C'O	Thunderstorm cycle	Customer specification	Cf. selection tables	Tested by FGH
0-15s –C'O – 15s – C'O - 15s – C'O – 15s – C'O 15s - C'O – 15s – C'O - 15s – C'O – 15s - C'O – 15 – C'O	Thunderstorm cycle	Customer specification	on enquiry	Tested by FGH

C Making with rated short-circuit making current
C' Making with rated current
O Breaking with rated short-circuit breaking current

Releases

Auxiliary releases
(open-circuit indirect over-current releases)
The excitation voltage is applied to the coil of the auxiliary release through a release contact of an auxiliary current source. The application of the pulse may be initiated manually, by an auxiliary current switch, over-current release or undervoltage release. On connection to AC voltage, the voltage is applied to the coil through a rectifier incorporated in the breaker cabinet. Since the coil is designed for short excitation only, the exciter circuit is controlled by an auxiliary switch contact driven by the breaker shaft that interrupts the circuit after release.

Secondary releases
(transformer-operated releases)
Secondary releases are used for the automatic release of switching devices on the occurrence of short-circuits and overcurrent. On response of the protective system the release is excited by transformer current and effects release of the switching device in this way. These releases are supplied for transformer secondary currents of 0.5 A and 1 A.

Undervoltage releases
Voltage is constantly applied to undervoltage releases by the auxiliary current source. When the auxiliary current circuit is interrupted or the voltage drops greatly, the switching device is released without any delay. If the undervoltage release is supplied by a voltage transformer downstream from the breaker, a holding device may be fitted which prevents release of the breaker not completely made.

Auxiliary current releases

Auxiliary switches
Auxiliary switches are always actuated by the breaker shaft direct through an intermediate linkage: their position always agrees with the position of the main contacts. In general the circuit-breakers are equipped with a 12-element auxiliary switch: 8 switch elements are reserved for the circuit (cf. circuit diagram). For further circuits up to 8 switch elements may be fitted additionally. Moreover, the switching device may be equipped with a mechanically delayed switching element (single-pole wiper, T ≥ 50 msec.).

Push switches
The push switches are snap-acting switches, which are attached to the drive. In contrast to auxiliary switches, snap-acting switches are not automatically dependent on the position of the switching device but are actuated, for example, by means of cams or by elements mounted on the breaker. The auxiliary current switches are supplied wired as far as the terminal strip (to order with plug and plug lower section in compliance with DIN 43460, draft Sept. 92).

Trucks

Trucks for circuit-breakers are made from bevelled metal sheets and sectional steel and are provided with castors. Binding dimensional drawings are supplied on request.

Overvoltage arresters

Overvoltage arresters must be used to protect the high-voltage motor circuits against overvoltages. To determine the type of arrester needed the following data must be mentioned:
rated motor voltage
max. ambient temperature
type of transformer star point
earth-fault duration.

Specifications and tests

Specifications

The vacuum circuit-breakers contained in this list comply with the specifications for AC switching devices for voltages above 1 kV in compliance with DIN VDE 067C, parts 101 - 108, IEC Publication 56, BS 5311 and NF-C 64. The vacuum circuit-breakers comply to a great extent with the US standards ANSI C 37.06 as weil as NEMA Standards Publication No. SG4 and are suitable for normal service conditions in accordance with DIN VDE 0670, part 1000 and IEC Publication 694.

Tests

Vacuum circuit-breakers have proved their suitability in the type test and in numerous series of tests during development. The tests were performed in our own test shops and by impartial institutes like FGH and KEMA. The tests covered not only conformity with the type tests in accordance with specifications but also numerous special requirements as well as determining the life characteristics of the switching chambers and their suitability for type-tested switchgear and controlgear; in addition they were subjected to numerous network tests. The reliability, safety and mechanical functions of the switching devices were tested in duration tests.

Rated voltage - insulation level, specifications

Voltage designation and insulation level in the		Rated voltage	Insulation level		Rated peak lightning withstand voltage in respect of earth	Rated AC withstand voltage in respect of earth	Specifications[2]
Type designation		kV	kV	–	kV	kV	
		4.76	12		60	19	IEC, CSA, ANSI, NEMA
	12-2	7.2	12	2	60	20	VDE, IEC, BS, NF, ÖVE
		12	12	2	75	28	VDE, IEC, BS, NF, ÖVE
		8.25	17.5		95	36	IEC, CSA, ANSI, NEMA
	17-2	15	17.5		95	36	IEC, CSA, ANSI, NEMA
VA		17.5	17.5	2	95	38	VDE, IEC, BS, NF, ÖVE
VAA	24-2	15.5	24		110	50	IEC CSA
VXC		24	24	2	125	50	VDE, IEC, BS, NF, ÖVE
		25.8	36		150	60	IEC
	36-2	27.6	36		125	60	CSA
		36	36	2	170	70	VDE, IEC, BS, NF, ÖVE
		38	36		150	80	IEC, CSA, ANSI
	38-2	38			200	80	IEC, NEMA
	17	17.5	36	2	170	70	VDE, IEC, SEV, ÖVE [1]
VXA	25	25	36	2	170	70	VDE, IEC, SEV, ÖEV [1]
VXB	52	55	52		250	105	AS [1]

1) Requirements of various railway administrations
2) Versions in compliance with ANSI and NEMA, cf. special table

Mechanical reliability and admissible switching cycles

Vacuum circuit-breaker VA

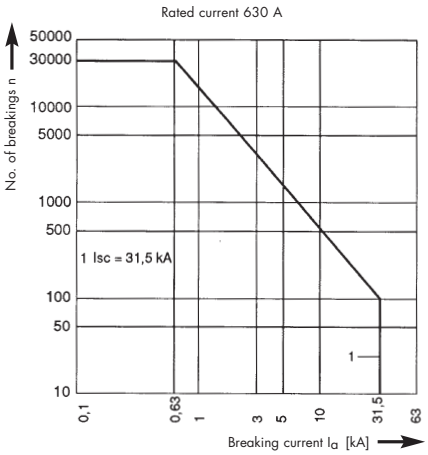

Vacuum circuit-breaker VA

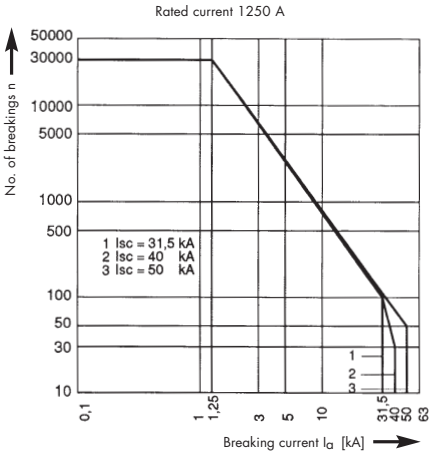

Vacuum circuit-breaker VA

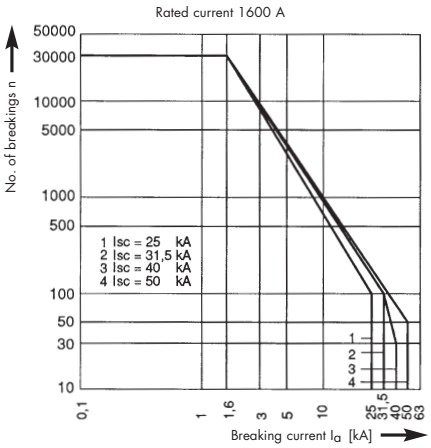

Vacuum circuit-breaker VA

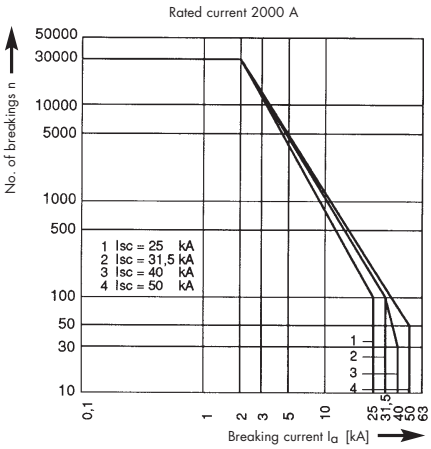

Vacuum circuit-breaker VA

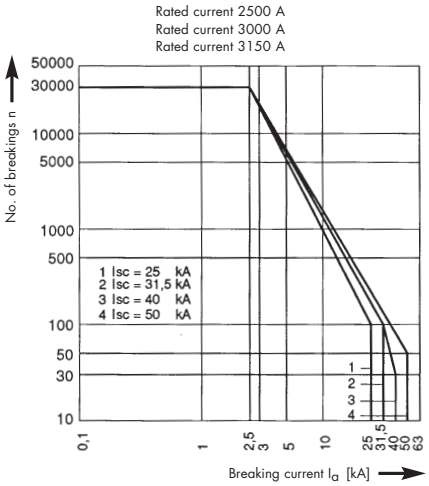

Vacuum circuit-breaker VAA

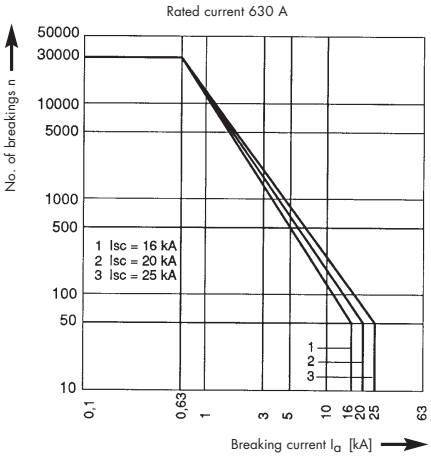

Vacuum circuit-breaker VAA

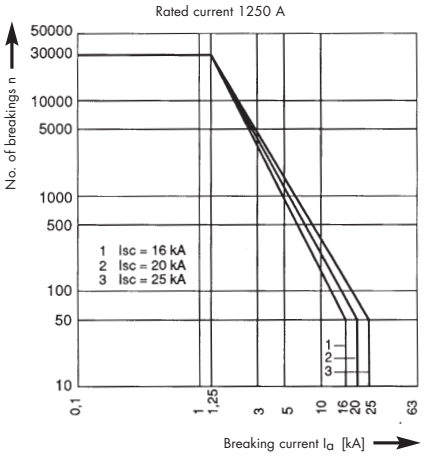

Vacuum circuit-breaker VAA

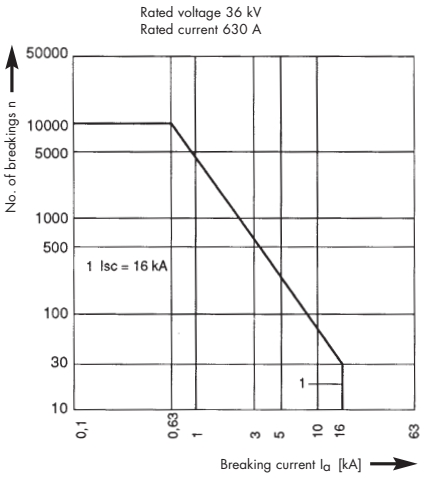

Vacuum circuit-breaker VAA

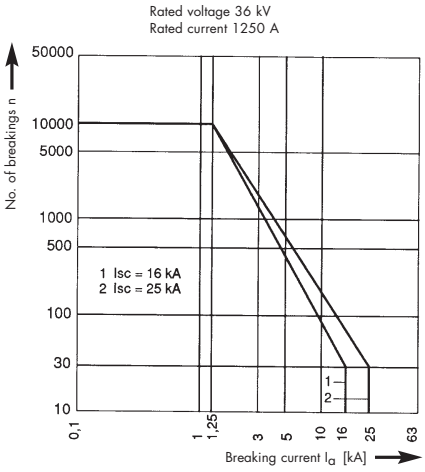

Vacuum circuit-breaker VXC

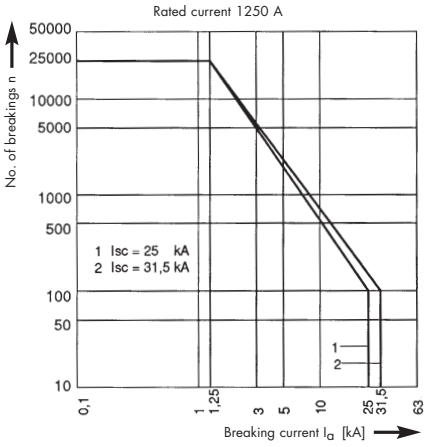

Vacuum circuit-breaker VXC

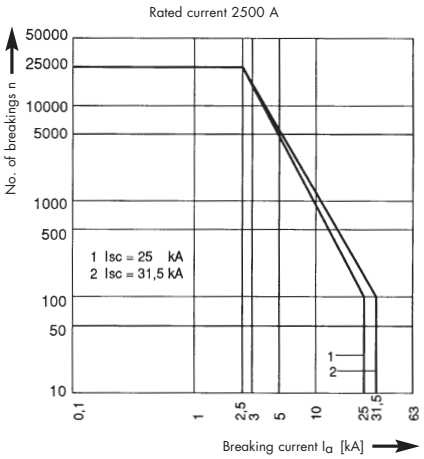

Vacuum circuit-breaker VXA, VXB

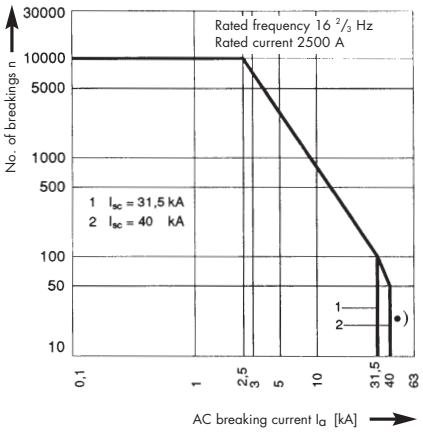

Vacuum circuit-breaker VXA

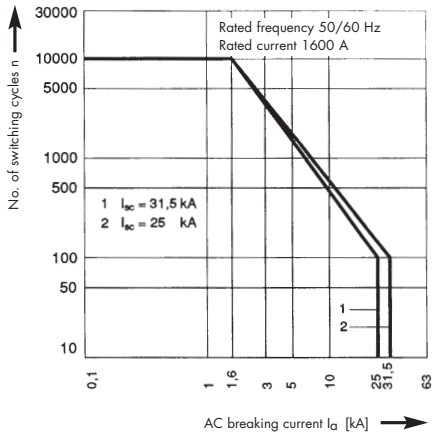

Vacuum circuit-breaker VXA

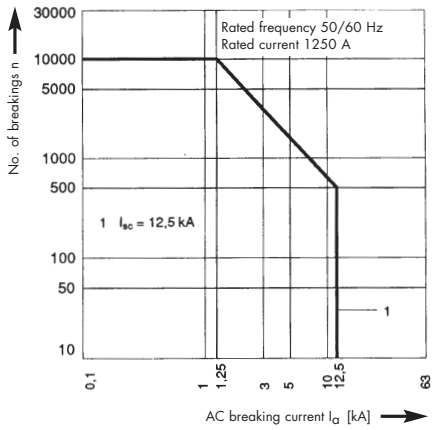

Switching capacity

Ease of maintenance of the vacuum circuit-breaker is the basis for their economical operation. As a rule the switching chamber need not be exchanged during the service life of the switchgear. The admissible number of switching cycles with various breaking currents is shown in the diagrams.
The long service life must be taken into consideration in price/performance comparisons with other switching principles, particularly when high switching cycles are specified. In other cases maintenance of the drive and the unavoidable expenses for safety isolation determine the availability and maintenance costs. The requirement for only one inspection of the drive after 10,000 switching cycles or after ten years service means a reduction in maintenance costs to a minimum.
The vacuum circuit-breakers VXC are designed for very high numbers of switching cycles, e.g. as furnace switch.
After 25,000 switching cycles the drive should be inspected and the vacuum switching chambers be replaced. The mechanical life of the vacuum circuit-breaker VXC is 75,000 switching cycles.

Type/ Rated voltage – Insulation level kV-List	Rated current A	Rated short-circuit making current kA	Rating short-circuit breaking current kA	Percentage DC component %	Rating short-circuit duration s[4]	Rated frequency 50 Hz	Rated frequency 60 HZ	Rated switching sequence: 0–3 min – CO – 3 min – CO	Rated switching sequence: 0–0.3 s – CO – 3 min – CO Fast auto-reclosure	Rated switching sequence: 0–15 s – C'O – 15 s – C'O – 15 s – C'O Thunderstorm cycle	Pole centre spacing 160 mm	Pole centre spacing 210 mm	Pole centre spacing 275 mm	Construction: for flat connenction	Construction: with plug-in contact	Drive: manual	Drive: motor	Rated breaking current on switching capacitors A[1) 2)]
VAA 506/[6]12-2	630	50	20	50	3	•	•	•	•	•	•	•		•	•	•	•	630
VAA5012/12-2	1250	50	20	50	3	•	•	•	•	•	•	•		•	•	•	•	1250
VAA 636/[6]12-2	630	63	25	50	3	•	•	•	•		•	•		•	•	•	•	630
VAA6312/12-2	1250	63	25	50	3	•	•	•	•		•	•		•	•	•	•	1250
VA 806[6]12-2	630	80	31.5	50	3	•	•	•	•			•		•	•	•	•	630
VA 8012/ 12-2	1250	80	31.5	50	3	•	•	•	•			•		•	•	•	•	1250
VA 8016/ 12-2	1600	80	31.5	50	3	•	•	•	•			•		•	•	•	•	
VA 8020/ 12-2	2000	80	31.5	50	3	•	•	•	•			•		•	•	•	•	
VA 8025/ 12-2	2500	80	31.5	50	3	•	•	•	•			•		•	•	•	•	
VA 8031/ 12-2	3000	80	31.5	50	3	•		•	•			•			•	•	•	
	3150	80	31.5	50	3	•							•	•				
	3000	80	31.5	50	3		•	• [3]					•	•	•	•	•	
VA10012/12-2	1250	100	40	20	3	•	•	•				•		•	•	•	•	1250
VA10016/12-2	1600	100	40	20	3	•	•	•				•		•	•	•	•	
VA10020/12-2	2000	100	40	25	3	•	•	•				•		•	•	•	•	
VA10025/12-2	2500	100	40	25	3	•	•	•				•		•	•	•	•	
VA10031/12-2	3000	100	40	25	3	•		•				•			•	•	•	
	3150					•							•	•				
	3000	100	40	25	3		•	• [3]					•	•	•	•	•	
VA12512/12-2	1250	125	50	20	3	•	•	•				•		•	•	•	•	1250
VA12516/12-2	1600	125	50	20	3	•	•	•				•		•	•	•	•	
VA12520/12-2	2000	125	50 [5]	20	3	•	•	•				•		•	•	•	•	
VA12525/12-2	2500	125	50 [5]	20	3	•	•	•				•		•	•	•	•	
VA12531/12-2	3000	125	50 [5]	20	3	•		•				•			•	•	•	
	3150					•							•	•				
	3000	125	50 [5]	20	3		•	• [3]					•	•	•	•	•	

1) Also parallel switching of capacitors. The peak rating of a high-frequency making current must not exceed 5 kA at 3 kHz. When the switch is open the capacitor battery must remain earthed through the discharge device. Provide modern ZnO arresters for protection against overvoltage.
2) Higher ratings to order
3) Also CO – 15 sec – CO
4) With flat connection
5) At 7.2 kV and with pole centre spacing 275 mm rated short-circuit breaking current 60 kA, rated short-circuit making current 150 kA
6) Suitable up to 800 A

Switching cycles			Minimum actuation time				Opening time[1]				Under-voltage release	Auxiliary breaking release					
Drive	Switching chamber		Make	Break			Auxiliary release					Auxiliary release				Secondary release	
Maintenancefree switching cycles for drive	with rated current	with rated short-circuit breaking current		Auxiliary release without Auxiliary energy-storing	Auxiliary release with Auxiliary energy-storing	Closing time[1]	without Auxiliary energy-storing	with Auxiliary energy-storing	Arcing time	Auxiliary make release	without time delay	without Auxiliary energy-storing	with Auxiliary energy-storing	without Auxiliary energy-storing	with Auxiliary energy-storing		
			ms	ms	ms	ms	ms	ms	ms			1st release or		2nd release or			3rd rel.
10 000	30 000	50	20	20	50	45-65	25-40	45-65	6-12	•	•	•	•	•	•	•	•
10 000	30 000	50	20	20	50	45-65	25-40	45-65	6-12	•	•	•	•	•	•	•	•
10 000	30 000	50	20	20	50	45-65	25-40	45-65	6-12	•	•	•	•	•	•	•	•
10 000	30 000	50	20	20	50	45-65	25-40	45-65	6-12	•	•	•	•	•	•	•	•
10 000	30 000	100	20	20	50	45-65	25-40	45-65	6-12	•	•	•	•	•	•	•	•
10 000	30 000	100	20	20	50	45-65	25-40	45-65	6-12	•	•	•	•	•	•	•	•
10 000	30 000	100	20	20	50	45-65	25-40	45-65	6-12	•	•	•	•	•	•	•	•
10 000	30 000	100	20	20	50	45-65	25-40	45-65	6-12	•	•	•	•	•	•	•	•
10 000	30 000	100	20	20	50	45-65	25-40	45-65	6-12	•	•	•	•	•	•	•	•
10 000	18000	100	20	20	50	45-65	25-40	45-65	6-12	•	•	•	•	•	•	•	•
10 000	18000	100	20	20	50	45-65	25-40	45-65	6-12	•	•	•	•	•	•	•	•
10 000	30 000	30	20		50	45-65		45-65	6-12	•	•		•		•	•	•
10 000	30 000	30	20		50	45-65		45-65	6-12	•	•		•		•	•	•
10 000	30 000	30	20		50	45-65		45-65	6-12	•	•		•		•	•	•
10 000	30 000	30	20		50	45-65		45-65	6-12	•	•		•		•	•	•
10 000	18000	30	20		50	45-65		45-65	6-12	•	•		•		•	•	•
10 000	18000	30	20		50	45-65		45-65	6-12	•	•		•		•	•	•
10 000	30 000	50	20		50	45-65		45-65	6-12	•	•		•		•	•	•
10 000	30 000	50	20		50	45-65		45-65	6-12	•	•		•		•	•	•
10 000	30 000	50	20		50	45-65		45-65	6-12	•	•		•		•	•	•
10 000	30 000	50	20		50	45-65		45-65	6-12	•	•		•		•	•	•
10 000	18000	50	20		50	45-65		45-65	6-12	•	•		•		•	•	•
10 000	18000	50	20		50	45-65		45-65	6-12	•	•		•		•	•	•

[1] The ratings shown in the tables are approximate, precise rating on equiry

Type/ Rated voltage – Insulation level kV-List	Rated current A	Rated short-circuit making current kA	Rating short-circuit breaking current kA	Percentage DC component %	Rating short-circuit duration s[4]	Rated frequency 50 Hz	Rated frequency 60 HZ	Rated switching sequence: 0–3 min – CO – 3 min – CO	Rated switching sequence: 0–0.3 s – CO – 3 min – CO Fast auto-reclosure	Rated switching sequence: 0–15 s – C'O – 15 s – C'O – 15 s – C'O Thunderstorm cycle	Pole centre spacing 160 mm	Pole centre spacing 210 mm	Pole centre spacing 275 mm	Construction: for flat connection	Construction: with plug-in contact	Drive: manual	Drive: motor	Rated breaking current on switching capacitors A[1) 2)]
VAA506/[5] 17-2	630	50	20	40	3	•	•	•	•	•	•	•	•	•	•	•	•	630
VAA5012/17-2	1250	50	20	40	3	•	•	•	•	•	•	•	•	•	•	•	•	1250
VAA636/[5] 17-2	630	63	25	40	3	•	•	•	•		•	•	•	•	•	•	•	630
VAA6312/17-2	1250	63	25	40	3	•	•	•	•		•	•	•	•	•	•	•	1250
VA 6320/ 17-2	2000	63	25	40	3	•	•	•	•			•		•	•	•	•	1250
VA 8012/ 17-2	1250	80	31.5	20	3	•	•	•	•			•	•	•	•	•	•	1250
VA 8016/ 17-2	1600	80	31.5	20	3	•	•	•	•			•		•	•	•	•	1250
VA 8020/ 17-2	2000	80	31.5	20	3	•	•	•	•			•	•	•	•	•	•	1250
VA 8025/ 17-2	2500	80	31.5	20	3	•	•	•	•			•	•	•	•	•	•	1250
VA 8031/ 17-2	3000	80	31.5	20	3	•		•	•			•	•		•	•	•	1250
	3150	80	31.5	20	3	•							•	•				
	3000	80	31.5	20	3		•	• [3]	•			•	•	•	•	•	•	1250
VA10025/17-2	2500	100	40	40	3	•	•	•	• [2]		•			•	•	•	•	1250

1) Also parallel switching of capacitors. The peak rating of a high-frequency making current must not exceed 5 kA at 3 kHz. When the switch is open the capacitor battery must remain earthed through the discharge device. Provide modern ZnO arresters for protection against overvoltage.

2) Higher ratings to order
3) Also CO – 15 sec – CO
4) With flat connection
5) Suitable up to 800 A

Switching cycles Drive	Switching cycles Switching chamber		Minimum actuation time Make	Minimum actuation time Break			Opening time[1]				Under-voltage release	Auxiliary breaking release					
Maintenancefree switching cycles for drive	with rated current	with rated short-circuit breaking current		Auxiliary release without Auxiliary energy-storing	Auxiliary release with Auxiliary energy-storing	Closing time[1]	Auxiliary release without Auxiliary energy-storing	Auxiliary release with Auxiliary energy-storing	Arcing time	Auxiliary make release	without time delay	Auxiliary release				Secondary release	
												without Auxiliary energy-storing	with Auxiliary energy-storing	without Auxiliary energy-storing	with Auxiliary energy-storing		
												1st release or		2nd release or			3rd rel.
			ms	ms	ms	ms	ms	ms	ms								
10 000	30 000	50	20	20	50	45-65	25-40	45-65	6-14	•	•	•	•	•	•	•	•
10 000	30 000	50	20	20	50	45-65	25-40	45-65	6-14	•	•	•	•	•	•	•	•
10 000	30 000	50	20	20	50	45-65	25-40	45-65	6-14	•	•	•	•	•	•	•	•
10 000	30 000	50	20	20	50	45-65	25-40	45-65	6-14	•	•	•	•	•	•	•	•
10 000	30 000	100	20	20	50	45-65	25-40	45-65	6-14	•	•	•	•	•	•	•	•
10 000	30 000	100	20		50	45-65		45-65	6-14	•	•		•		•	•	•
10 000	30 000	100	20		50	45-65		45-65	6-14	•	•		•		•	•	•
10 000	30 000	100	20		50	45-65		45-65	6-14	•	•		•		•	•	•
10 000	30 000	100	20		50	45-65		45-65	6-14	•	•		•		•	•	•
10 000	30 000	100	20		50	45-65		45-65	6-14	•	•		•		•	•	•
10 000	30 000	100	20		50	45-65		45-65	6-14	•	•		•		•	•	•
10 000	30 000	50	20	20	50	45-65	25-40	45-65	6-14	•	•	•	•	•	•	•	•

[1] The ratings shown in the tables are approximate, precise rating on equiry

Type/ Rated voltage – Insulation level	Rated current	Rated short-circuit making current	Rating short-circuit breaking current	Percentage DC component	Rating short-circuit duration	Rated frequency		Rated switching sequence			Pole centre spacing			Construction		Drive		Rated breaking current on switching capacitors
								0–3 min – CO – 3 min – CO	0–0.3 s – CO – 3 min – CO Fast auto-reclosure	0–15 s – C'O – 15 s – C'O – 15 s – C'O – 15 s – C'O Thunderstorm cycle				for flat connection	with plug-in contact	manual	motor	
kV-List	A	kA	kA	%	s[4]	50 Hz	60 HZ				210 mm	275 mm	400 mm					A[1) 2)]
VAA 406/ 24-2	630	40	16	40	3	•	•	•	•	•	•	•		•	•	•	•	630[1)]
VAA4012/24-2	1250	40	16	40	3	•	•	•	•	•	•	•		•	•	•	•	1250[1)]
VAA6312/24-2	1250	63	25	40	3	•	•	•	•		•	•		•	•	•	•	1250[1)]
VA 6316/ 24-2	1600	63	25	40	3	•	•	•	•		•	•		•	•	•	•	1250
VA 6320/ 24-2	2000	63	25	40	3	•	•	•	•		•	•		•	•	•	•	1250
VA 6325/ 24-2	2500	63	25	40	3	•	•	•	•		•	•		•	•	•	•	1250
VA 8012/ 24-2	1250	80	31.5	40	3	•	•	•	•		•	•		•	•	•	•	1250
VA 8016/ 24-2	1600	80	31.5	40	3	•	•	•	•		•	•		•	•	•	•	1250
VA 8020/ 24-2	2000	80	31.5	40	3	•	•	•	•		•	•		•	•	•	•	1250
VA 8025/ 24-2	2500	80	31.5	40	3	•	•	•	•			•		•	•	•	•	1250
VAA4012/36-2	1250	40	16	40	3	•	•	•	•			•	•	•	•	•	•	1250[2)]
VAA6312/36-2	1250	63	25	40	3	•	•	•	•			•	•	•	•	•	•	1250[2)]
VA 8012/ 36-2	1250	80	31.5	40	3	•	•	•	•			•	•	•	•	•	•	1250[1)]
VA 8020/ 36-2	2000	80	31.5	40	3	•	•	•	•			•	•	•	•	•	•	1250
VA 8025/ 36-2	2500	80	31.5	40	3	•	•	•	•				•	•	•	•	•	1250
VAA 406/ 36-2	630	40	16	40	3	•	•	•	•			•	•	•	•	•	•	630
VA10020/ 24-2	2000	100	40	40	3	•	•	•	• [3)]				•	•		•	•	1250
VA10025/ 24-2	2500	100	40	40	3	•	•	•	• [3)]			•	•	•		•	•	1250
VA10020/ 36-2	2000	100	40	40	3	•	•	•	• [3)]		•	•		•		•	•	1250
VA10025/ 36-2	2500	100	40	40	3	•	•	•	• [3)]			•		•		•	•	1250

1) Also parallel switching of capacitors
2) No parallel switching of capacitors
3) Higher ratings to order
4) Also CO – 15sec – CO
5) With flat connection

1) 2) The peak rating of a high-frequency making current must not exceed 5 kA at 3 kHz. When the switch is open the capacitor battery must remain earthed through the discharge device.
Provide modern ZnO arresters for protection against overvoltage.

Switching cycles			Minimum actuation time				Opening time[1]				Under-voltage release	Auxiliary breaking release					
Drive[1]	Switching chamber		Make	Break								Auxiliary release				Secondary release	
				Auxiliary release			Auxiliary release										
Maintenancefree switching cycles for drive	with rated current	with rated short-circuit breaking current		with-out Auxiliary energy-storing	with Auxiliary energy-storing	Closing time[1]	with-out Auxiliary energy-storing	with Auxiliary energy-storing	Arcing time	Auxiliary make release	without time delay	with-out Auxiliary energy-storing	with Auxiliary energy-storing	with-out Auxiliary energy-storing	with Auxiliary energy-storing		
			ms	ms	ms	ms	ms	ms	ms			1st release or		2nd release or			3rd rel.
10 000	30 000	50	20	20	50	45-65	25-40	45-65	8-14	•	•	•	•	•	•	•	•
10 000	30 000	50	20	20	50	45-65	25-40	45-65	8-14	•	•	•	•	•	•	•	•
10 000	30 000	50	20	20	50	45-65	25-40	45-65	8-14	•	•	•	•	•	•	•	•
10 000	30 000	100	20	20	50	45-65	25-40	45-65	8-14	•	•	•	•	•	•	•	•
10 000	30 000	100	20	20	50	45-65	25-40	45-65	8-14	•	•	•	•	•	•	•	•
10 000	30 000	100	20	20	50	45-65	25-40	45-65	8-14	•	•	•	•	•	•	•	•
10 000	30 000	100	20	20	50	45-65	25-40	45-65	8-14	•	•	•	•	•	•	•	•
10 000	30 000	100	20	20	50	45-65	25-40	45-65	8-14	•	•	•	•	•	•	•	•
10 000	30 000	100	20	20	50	45-65	25-40	45-65	8-14	•	•	•	•	•	•	•	•
10 000	30 000	100	20	20	50	45-65	25-40	45-65	8-14	•	•	•	•	•	•	•	•
10 000	10 000	30	20	20	50	45-65	25-40	45-65	8-14	•	•	•	•	•	•	•	•
10 000	10 000	30	20	20	50	45-65	25-40	45-65	8-14	•	•	•	•	•	•	•	•
10 000	30 000	100	20	20	50	45-65	25-40	45-65	8-14	•	•	•	•	•	•	•	•
10 000	30 000	100	20	20	50	45-65	25-40	45-65	8-14	•	•	•	•	•	•	•	•
10 000	30 000	100	20	20	50	45-65	25-40	45-65	8-14	•	•	•	•	•	•	•	•
10 000	30 000	30	20	20	50	45-65	25-40	45-65	8-14	•	•	•	•	•	•	•	•
10 000	30 000	40	20	20	50	45-65	25-40	45-65	8-14	•	•	•	•	•	•	•	•
10 000	30 000	40	20	20	50	45-65	25-40	45-65	8-14	•	•	•	•	•	•	•	•
10 000	30 000	40	20	20	50	45-65	25-40	45-65	8-14	•	•	•	•	•	•	•	•
10 000	30 000	40	20	20	50	45-65	25-40	45-65	8-14	•	•	•	•	•	•	•	•

1) The ratings shown in the tables are approximate, precise rating on equiry.

Vacuum circuit-breakers
VXA, B, 17.5 kV, 27 kV, 52 kV
(for railway operations)

Type/ Rated voltage – Insulation level kV-List	Rated voltage (phase/earth) kV b	Rated lightning withstand earth kV	Rated AC withstand voltage kV	Rated current A	Rated short-circuit making current kA	Rated short-circuit breaking current kA	Percentage DC component %	Rated short-circuit duration s	Rated frequency 16 2/3 -25 Hz	50 HZ	60 HZ	Rated switching sequence 0–3 min – CO – 3 min – CO	CO -15 s - CO	CO – 5 s – CO	O – 5 s – CO – 60 s – CO	Construction Single pole	Two poles	Single pole with two switching chambers per pole	Two poles with two switching chambers per pole	Switching chamber
VXA5016/ 17.5	17.5	170	70	1600	50	20	50	3	•			•		•		•				
VXA6316/ 17.5	17.5	170	70	1600	63	25	50	3	•			•		•		•				
VXA8020/ 17.5	17.5	170	70	2000	80	31,5	50	3	•			•		•		•				
VXA8025/ 17.5	17.5	170	70	2500	80	31.5	50	3	•			•		•		•				
VXA10020/17.5	17.5	170	70	2000	100	40/45	50/15	3	•			•			•		•			
VXA10025/17.5	17.5	170	70	2500	100	40/45	50/15	3	•			•			•		•			
VXA6316/ 27	27.5	170	70	1600	63	25	50	3		•	•	•				•				
VXA8016/ 27	27.5	170	70	1600	80	31.5	50	3		•	•	•				•				
VXA6320/ 17	17,5	170	70	2000	63	25	50	3	•			•		•		•				
VXA6312/ 52	27.5/55[1]	250	105	1250	31.5	12.5	35	3		•					•					
VXA6320/ 52	27.5/55[1]	250	105	2000	31.5	12.5	35	3		•					•					
VXA8020/ 27	27.5	170	70	2000	80	31.5	50	3		•	•	•				•				
VXB 6312/25-250-55	27.5	250	105	1200	63/67.5	25	50	3		•	•		•					•		
VXB 8020/25-250-55	27.5	250	105	2000	63/67.5	25	50	3		•	•		•					•		
VXB 8012/38-150-55	34.5 √3	150	80	1200	67.5	25	–	3		•	•		•				•			
VXA 6312/25-250	27.5	250	105	1200	67.5	25	50	3	–	•	•		•					•		
VXA 8020/25-250	27.5	250	105	2000	67.5	25	50	3	–	•	•		•					•		
VXA 6316/25-200	15	200	80	1200	67.5	25	–	3	25 Hz	–	–		•			•				
VXA 6325/25-200	15	200	80	2000	67.5	25	–	3	25 Hz	–	–		•			•				

1) Rated voltage (switching gap)

Switching cycles			Minimum actuation time					Opening time[2]						Auxiliary breaking release (max. 3 releases possible)						
	Switching chamber		Make	Break										Auxiliary release						Secondary release
Drive	with rated current	with rated short-time breaking current		Auxiliary energy-storing without	Auxiliary energy-storing with	Fast auto-reclosure	Closing time	Auxiliary energy-storing without	Auxiliary energy-storing with	Fast auto-reclosure	Arcing time	Auxiliary making release	Under-voltage release (not for fast auto-reclosure) without time delay	Auxiliary energy-storing without	Auxiliary energy-storing with	Fast auto-reclosure	Auxiliary energy-storing without	Auxiliary energy-storing with	
			ms	ms	ms	ms	ms	ms	ms					1st release or	1st release or		2nd release or	2nd release or	3rd rel.
10 000	10 000	100	20	20		5	45-65	25-40		10-17	3-38	•	•	•	•		•	•	•
10 000	10 000	100	20	20		5	45-65	25-40		10-17	3-38	•	•	•	•		•	•	•
10 000	10 000	100	20	20		5	45-65	25-40		10-17	3-38	•	•	•	•		•	•	•
10 000	10 000	100	20	20		5	45-65	25-40		10-17	3-38	•	•	•	•		•	•	•
10 000	10 000	[1]	20	20		5	45-65	25-40		10-17	3-38	•	•	•	•		•	•	•
10 000	10 000	[1]	20	20		5	45-65	25-40		10-17	3-38	•	•	•	•		•	•	•
10 000	10 000	100	20	20	50		45-65	25-40	45-65		3-16	•	•	•	•		•	•	•
10 000	10 000	100	20	20	50		45-65	25-40	45-65		3-16	•	•	•	•		•	•	•
10 000	10 000	100	20	20		5	45-65	25-40		10-17	3-38	•	•	•		•	•	•	•
5 000	5000	400	20	20			45-65	25-40			3-16	•	•	•			•	•	•
5 000	5 000	400	20	20			45-65	25-40			3-16	•	•	•			•	•	•
10 000	10 000	100	20	20	50		45-65	25-40	45-65		3-16	•	•	•	•		•	•	•
10 000	10 000	100	20	20	50		45-65	25-40	45-65		3-16	•	•	•	•		•	•	•
10 000	10 000	100	20	20	50		45-65	25-40	45-65		3-16	•	•	•	•		•	•	•
10 000	10 000	100	20		50		45-65		45-65		3-16	•	•		•			•	•
10 000	10 000	100	20	20	50		45-65	25-40	45-65		3-16	•	•	•	•		•	•	•
10 000	10 000	100	20	20	50		45-65	25-40	45-65		3-16	•	•	•	•		•	•	•
10 000	10 000	50	20		50		45-65		45-65		3-25	•	•		•			•	•
10 000	10 000	50	20		50		45-65		45-65		3-25	•	•		•			•	•

1) Admissible switching cycles at rated short-circuit breaking current 50 x 40 kA or 30 x 40 kA + 10 x 45 kA.
2) The ratings shown in the tables are approximate, precise rating on equiry.

Type/ Rated voltage – Insulation level	Rated current	Rated short-circuit making current	Rating short-circuit breaking current	Percentage DC component	Rating short-circuit duration	Rated frequency		Rated switching sequence		Pole centre spacing			Construction		Drive		Rated breaking current on switching capacitors
								0–3 min – CO – 3 min – CO	0–0.3 s – CO – 3 min – CO Fast auto-reclosure				for flat connection	with plug-in contact	manual	motor	
kV-List	A	kA	kA	%	s[4]	50 Hz	60 HZ			160 mm	210 mm	275 mm					A[1) 2)]
VXC6312/ 24-2	1250	63	25	40	3	•	•	•	•	•	•		•	•	•	•	1250[1)]
VXC6325/24-2	2500	63	25	40	3	•	•	•	•	•	•		•	•	•	•	1250[1)]
VXC6312/36-2	1250	63	25	40	3	•	•	•	•		•	•	•	•	•	•	1250[2)]
VXC6325/36-2	2500	63	25	40	3	•	•	•	•			•	•	•	•	•	1250[2)]
VXC8012/36-2	1250	80	31.5	40	3	•	•	•	•		•	•	•	•	•	•	1250[2)]
VXC8025/36-2	2500	80	31.5	40	3	•	•	•				•	•	•	•	•	1250[2)]
VXC6312/38-2	1250	63	25	40	3	•	•	•	•			•	•		•	•	1250[2)]
VXC6325/38-2	2500	63	25	40	3	•	•	•	•			•	•		•	•	1250[2)]
VXC8012/38-2	1250	80	31.5	40	3	•	•	•	•			•	•		•	•	1250[2)]
VXC8025/38-2	2500	80	31.5	40	3	•	•	•				•	•		•	•	1250[2)]

1) Also parallel switching of capacitors
3) Higher ratings to order
4) With flat connection

1) The peak rating of a high-frequency making current must not exceed 5 kA at 3 kHz. When the switch is open the capacitor battery must remain earthed through the discharge device.
Provide modern ZnO arresters for protection against overvoltage.

Switching cycles			Minimum actuation time				Opening-time[2]				Under-voltage release	Auxiliary breaking release			
Drive[1]	Switching chamber		Make	Break								Auxiliary release		Secondary release	
				Auxiliary release			Auxiliary release								
Maintenancefree switching cycles for drive	with rated current	with rated short-circuit breaking current		without Auxiliary energy-storing	with Auxiliary energy-storing	Closing time[1]	without Auxiliary energy-storing	with Auxiliary energy-storing	Arcing time	Auxiliary make release	without time delay	without Auxiliary energy-storing	with Auxiliary energy-storing	without Auxiliary energy-storing	with Auxiliary energy-storing
												1st release or	2nd release or	or	3rd rel.
			ms	ms	ms	ms	ms	ms	ms						
25 000	25 000	100	20	20		45-65	25-40		8-14	•	•	•	•	•	•
25 000	25 000	100	20	20		45-65	25-40		8-14	•	•	•	•	•	•
25 000	25 000	100	20	20		45-65	25-40		8-14	•	•	•	•	•	•
25 000	25 000	100	20	20		45-65	25-40		8-14	•	•	•	•	•	•
25 000	25 000	100	20	20		45-65	25-40		8-14	•	•	•	•	•	•
25 000	25 000	100	20	20		45-65	25-40		8-14	•	•	•	•	•	•
25 000	25 000	100	20	20		45-65	25-40		8-14	•	•	•	•	•	•
25 000	25 000	100	20	20		45-65	25-40		8-14	•	•	•	•	•	•
25 000	25 000	100	20	20		45-65	25-40		8-14	•	•	•	•	•	•
25 000	25 000	100	20	20		45-65	25-40		8-14	•	•	•	•	•	•

1) Mechanical life 75,000 switching cycles
2) The ratings shown in the tables are approximate, precise rating on equiry.

Circuit diagrams

Vacuum circuit-breakers without fast auto-reclosure Basic version

This circuit diagram shows the maximum possible secondary complement. Depending on scope of order, some components shown may not be fitted.

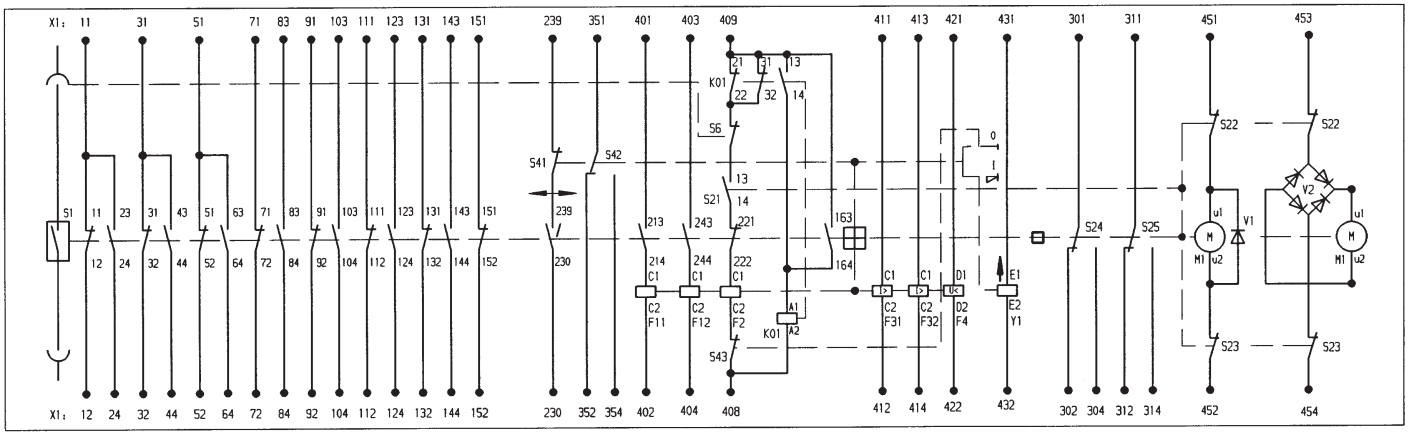

with terminal strip
with pump prevention relay

Units fitted in circuit-breaker depending on order
F 11 Auxiliary break release (open-circuit indirect over-current release)
F 2 Auxiliary make release (open-circuit indirect over-current release)
M 1 Motor for tensioning energy-storing device
S 1 Auxiliary switch
S 21-S 25 Push switch actuated by energy-storing device
S 41 Push switch actuated by press-button switch "Break/Make"
S 43 Push switch actuated by press-button switch "Break"
S 6 Push switch actuated by switchgear truck
V 1 Diode
V 2 Rectifier
X 1 Terminal strip

Tensioning the energy-storing device

By closing the switch (F 101) voltage is applied to the motor (M) and the energy-storing device is tensioned. On completion of the tensioning process the push switches (S 22 and S 23) are actuated by a shaft and the motor is disconnected.

Making

Making takes place either
(a) mechanically by means of the button "Make" or
(b) electrically by means of the contact element "Make" (SOE) which energises the auxiliary make release (F 2).
Once the making process has been completed the motor tensions the energy-storing device because the push switches (S 22 and S 23) are closed when the energy-storing device is detensioned.

Breaking

Breaking takes place either
(a) mechanically by means of the button "Break" or
(b) electrically by means of the contact element "Break" (SOA), which energises the auxiliary break release (F 11) or (c) electrically by an overcurrent relay (F 321) which energises the auxiliary break release (F 11)

Report

When the circuit-breaker is made, the report lamp "Make" (HOA) lights. When it is broken the report lamp "Broken" (HOE) lights. A switching pulse is applied via the wiper contact (239/230) to the relay "Defecct" (KOS) by the auxiliary switch in the circuit-breaker (S 1) but only if actuation takes place by means of the overcurrent relay (F 321) because on manual actuation the normally-closed contact of the push switch (S 41) of the button "Break" is opened or, on electrical actuation, the normally-closed contact of the switch element "Break" (SOA). The report relay "Defect" is equipped with a self-holding contact but may be deenergised by its disconnection section (SOR). Voltage is applied to the report lamp (HOS) through the report relay "Defect".

Vacuum circuit-breakers without fast auto-reclosure Basic version

This circuit diagram shows the maximum possible secondary complement. Depending on scope of order, some components shown may not be fitted.

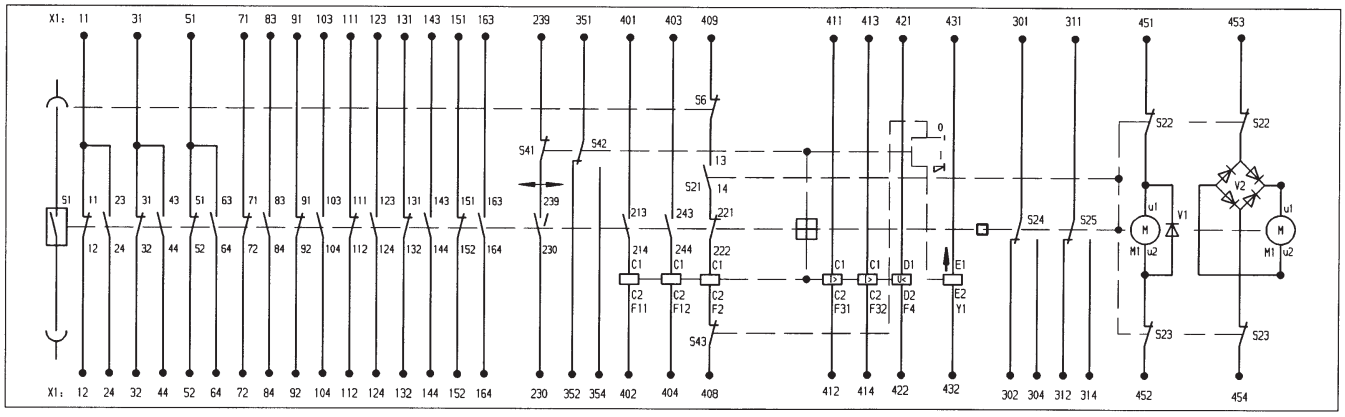

with terminal strip
without pump prevention relay

Units fitted in circuit-breaker depending on order	
F 11	Auxiliary break release (open-circuit indirect over-current release)
F 2	Auxiliary make release (open-circuit indirect over-current release)
KO1	Pumpverhinderungsrelais
M 1	Motor for tensioning energy-storing device
S 1	Auxiliary switch
S 21–S 25	Push switch actuated by energy-storing device
S 41	Push switch actuated by press-button switch "Break/Make"
S 43	Push switch actuated by press-button switch "Break"
S 6	Push switch actuated by switchgear truck
V 1	Diode
V 2	Rectifier
X 1	Terminal strip

Tensioning the energy-storing device, make, break and report take place as in vacuum circuit breakers without fast auto reclosure.

Fast auto-reclosure

On the occurrence of a short-circuit the overcurrent relay (F 321) applies a pulse, to the auxiliary break release (F 11) after expiry of the preset short switching time, the breaker is disconnected. On expiry of the preset a make instruction is applied to the auxiliary make release (F 2) through a normally-open contact of the relay for fast auto-reclosure (F 371). If the short-circuit is still present, a further break instruction is applied by the overcurrent release and the breaker is finally disconnected. A further make instruction is not generated by the relay for fast auto-reclosure.

Circuit diagrams
for circuit-breakers

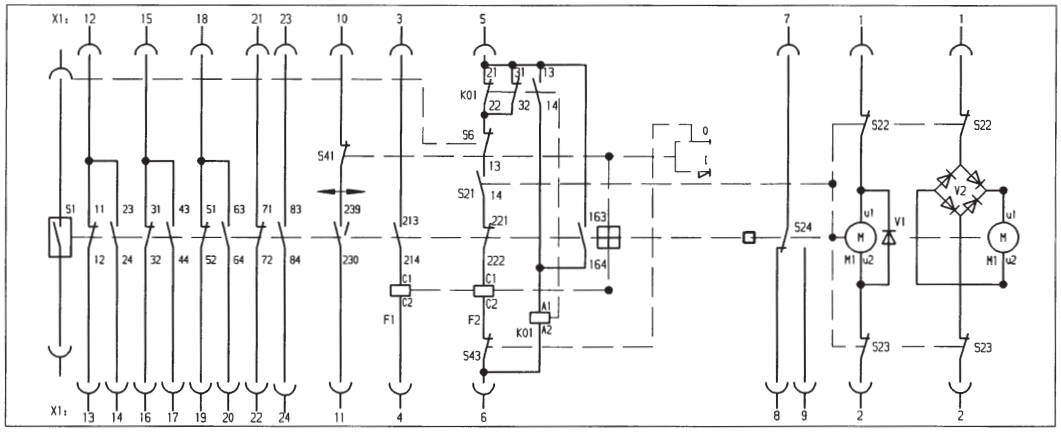

This circuit diagram shows the maximum possible secondary complement. Depending on scope of order, some components shown may not be fitted.

with 24-pin plug
with pump prevention relay

Units fitted in circuit-breaker depending on order

F 11	Auxiliary break release (open-circuit indirect over-current release)
F 2	Auxiliary make release (open-circuit indirect over-current release)
M 1	Motor for tensioning energy-storing device
S 1	Auxiliary switch
S 21–S 25	Push switch actuated by energy-storing device
S 41	Push switch actuated by press-bu tton switch "Break/Make"
S 43	Push switch actuated by press-button switch "Break"
S 6	Push switch actuated by switchgear truck
V 1	Diode
V 2	Rectifier
X 1	Terminal strip

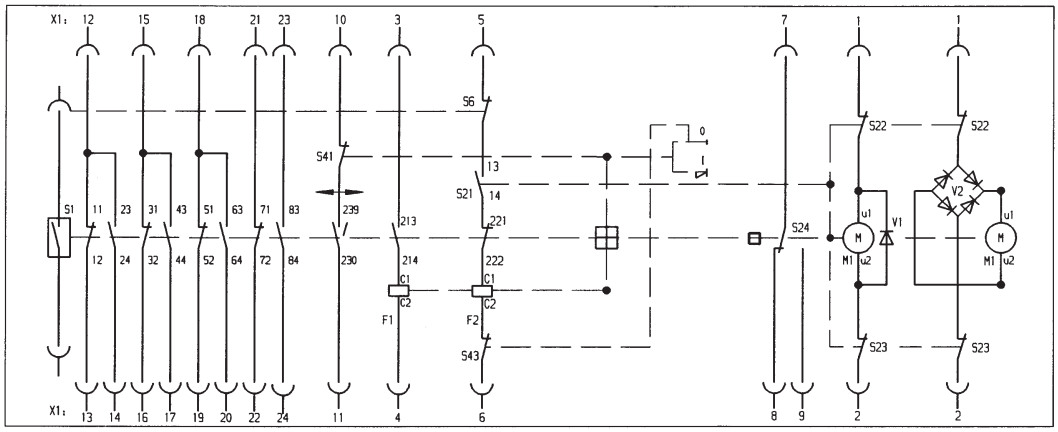

This circuit diagram shows the maximum possible secondary complement. Depending on scope of order, some components shown may not be fitted.

with 24-pin plug
without pump prevention relay

Circuit diagrams
for circuit-breakers

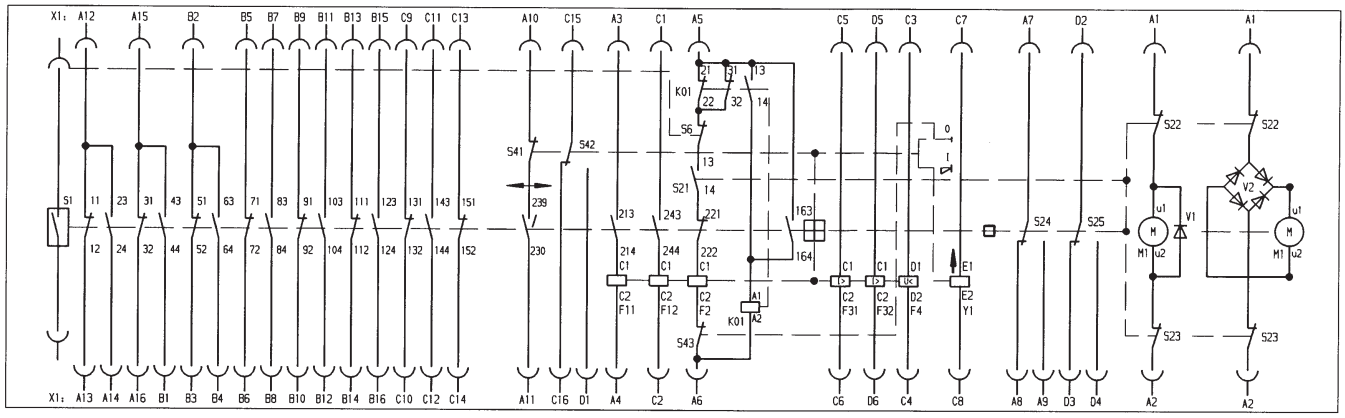

This circuit diagram shows the maximum possible secondary complement. Depending on scope of order, some components shown may not be fitted.

with 64-pin plug
with pump prevention relay

Units fitted in circuit-breaker depending on order

F 11	Auxiliary break release (open-circuit indirect over-current release)
F 2	Auxiliary make release (open-circuit indirect over-current release)
M 1	Motor for tensioning energy-storing device
S 1	Auxiliary switch
S 21–S 25	Push switch actuated by energy-storing device
S 41	Push switch actuated by press-button switch "Break/Make"
S 43	Push switch actuated by press-button switch "Break"
S 6	Push switch actuated by switchgear truck
V 1	Diode
V 2	Rectifier
X 1	Terminal strip

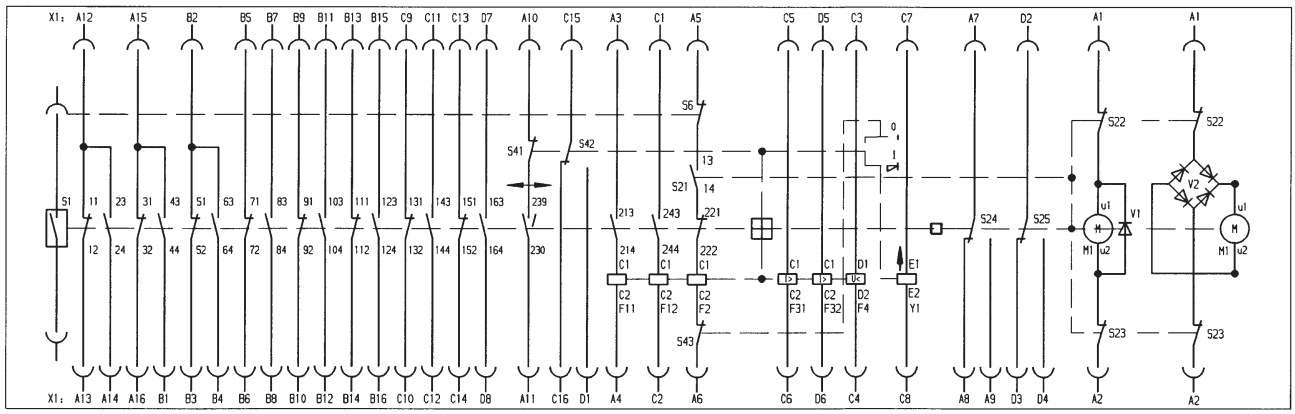

This circuit diagram shows the maximum possible secondary complement. Depending on scope of order, some components shown may not be fitted.

with 64-pin plug
without pump prevention relay

Vacuum circuit-breakers VXA with fast auto-reclosure 60 V DC

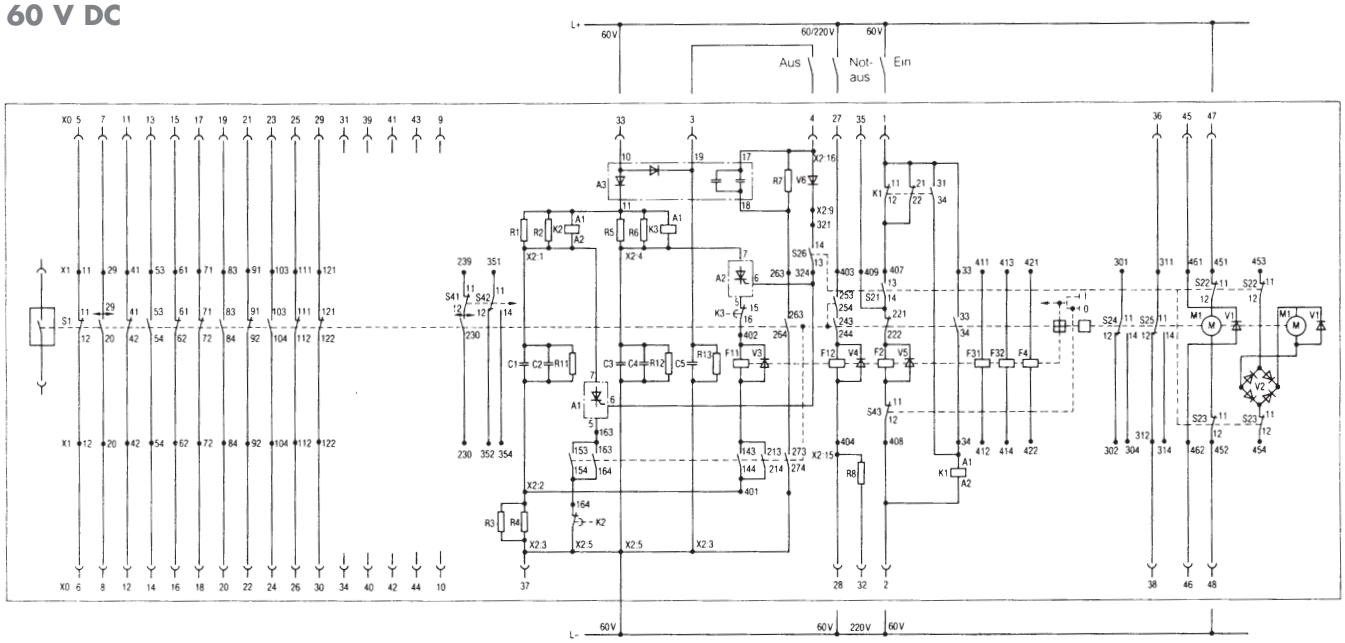

A 1 Thyristor module

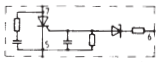

A 3 Capacitor-diode module

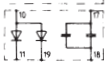

C 1, 2,3, 4, 5	Surge capacitors 1000 µF / 100 V
F 2	Auxiliary release Make
F 4	Undervoltage release
F 11	Auxiliary release Break
F 12	Auxiliary release Emergency Break
F 31, 32	Indirect overcurrent release
K 2	Time relay 1.5 sec.
M 1	Motor
R 1, 2	Charging resistor 39 Ω
R 3	Charging resistor 68 Ω
R 7	Protective resistor 68 Ω
R 11, 12	Discharge resistor 68 Ω
S 1	Auxiliary switch
S 21–26	Push switches actuated by energy-storing device
S 41–43	Push switches actuated by Break-Make switch
V 1, 3, 4, 5, 6	Diodes
V 2	Rectifier
X 0	Connector
X 1	Terminal strip in circuit-breaker
X 2	Terminal strip on switchgear truck

Tensioning the energy-storing device

Voltage is applied to the motor (M) by L+ and L- the energy-storing device is tensioned. On completion of the tensioning process the push switches (S 22 and S 23) are actuated by a shaft and the motor is disconnected.

Making

Making takes place
(a) mechanically by means of the button "Make" or
(b) electrically through the switch element "Make", through which the auxiliary make release (F 2) is energised.
Once the making process is completed, the motor tensions the energy-storing device because the push switches (S 22 and S 23) are closed when the energystoring device is detensioned.

Breaking

Breaking takes place
(a) mechanically by means of the button "Break" or
(b) electrically through the switch element "Break", through which the auxiliary break release (F 11) is energised, or
(c) electrically through the switch element "Emergency break", through which the auxiliary break release (F 12) is energised.

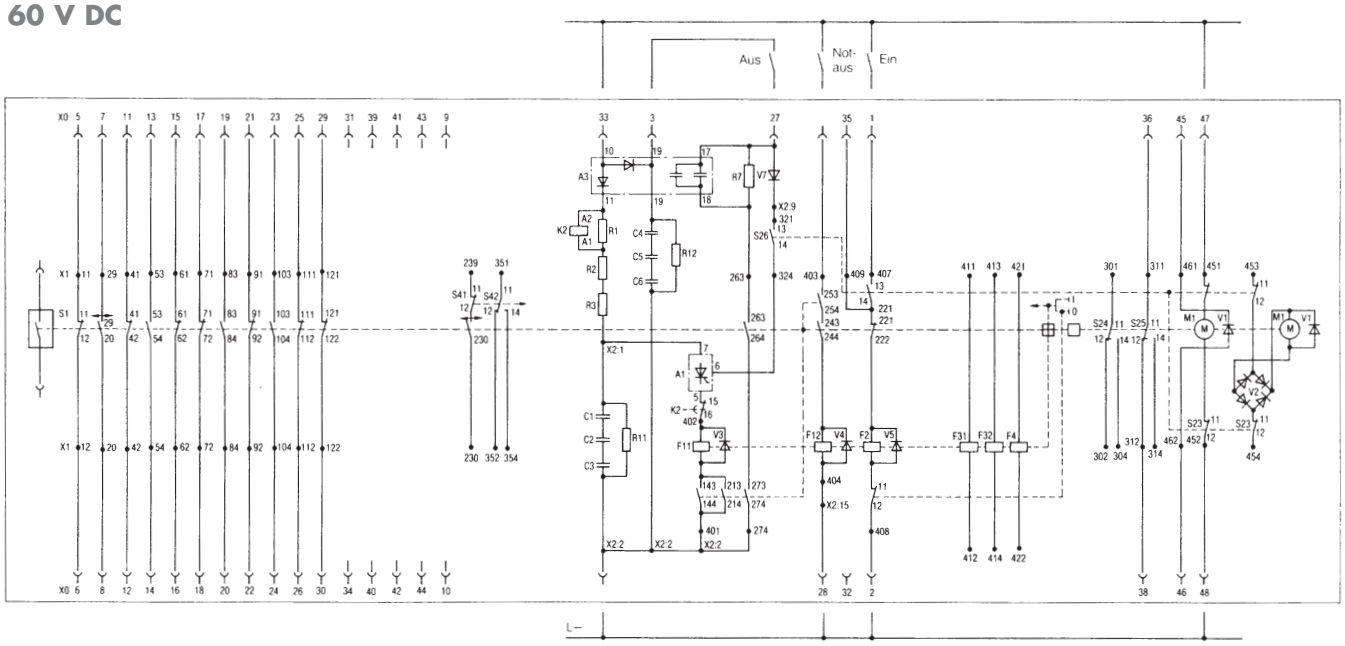

A 1, 2 Thyristor module

A 3 Capacitor-diode module

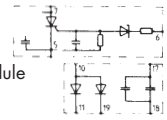

C 1, 2, 3, 4, 5	Surge capacitors 1000 µF/100 V
F 2	Auxiliary release Make
F 4	Undervoltage release
F 11	Auxiliary release Break
F 12	Auxiliary release Emergency Break
F 31, 32	Indirect overcurrent release
K 1	Pump prevention relay
K 2, 3	Time relay 1.5 sec.
M 1	Motor
R 1, 3, 5, 6	Charging resistor 39 Ω
R 2, 4	Charging resistor 14 Ω
R 7	Protective resistor 14 Ω
R 8	Series resistor 68 Ω
R 11, 12, 13	Discharge resistor 56 Ω
S 1	Auxiliary switch
S 21–26	Push switches actuated by energy-storing device
S 41–43	Push switches actuated by Break-Make switch
V 1, 3, 4, 5, 6	Diodes
V 2	Rectifier
X 0	Connector
X 1	Terminal strip in circuit-breaker
X 2	Terminal strip on switchgear truck

Tensioning the energy-storing device

Voltage is applied to the motor (M) by L+ and L- the energy-storing device is tensioned. On completion of the tensioning process the push switches (S 22 and S 23) are actuated by a shaft and the motor is disconnected.

Making

Making takes place
(a) mechanically by means of the button "Make" or
(b) electrically through the switch element "Make", through which the auxiliary make release (F 2) is energised.
Once the making process is completed, the motor tensions the energy-storing device because the push switches (S 22 and S 23) are closed when the energystoring device is detensioned.

Breaking

Breaking takes place
(a) mechanically by means of the button "Break" or
(b) electrically through the switch element "Break", through which the auxiliary break release (F 11) is energised, or
(c) electrically through the switch element "Emergency break", through which the auxiliary break release (F 12) is energised.

Vacuum tester

Vacuum tester VT 60

The dielectric strength of the breaker gap of the vacuum circuit-breaker may be tested using the vacuum tester VT 60.
Indirectly a check is performed, whether or not the internal pressure of the switching chamber is ≤ 10^{-2} mbar. This tester allows checking the vacuum in the switching chamber complies with the requirements
– in a simple and quick manner without dismantling the switching device
– without a complicated test assembly
– with adequate accuracy

Special features

- Simple handling
- Compact design (unit incl. case approx. the size of a brief case)
- Rugged construction
- Light weight (approx. 8 kg)
- Low capital outlay

Physical principle of the test method

The dielectric strength of the vacuum breaker gap is dependent on the chamber pressure "P".
Indirect checking of the vacuum is thus possible by means of a voltage measurement. The test point "A" must be so situated that, on the one hand, there is sufficient space to test point "B" (condition when chamber filled with air) and on the other hand, so that the vacuum switching chamber is not unnecessarily loaded.

Performance of the test

After connection of the vacuum tester VT 60 to the circuit-breaker to be tested, the test is performed with some few manipulations:
1. Select test voltage (40 kV or 60 kV)
2. Switch on mains switch, red warning light shines “Caution high voltage"
3. At the same time turn rotary knobs "Test" with left and right hands in the direction shown by the arrow to the stop and wait some seconds for the lamps to light up "Not defective" and "Defective". If the green lamp lights (Not defective) the test has been completed, the vacuum chamber may be considered serviceable.
4. If the red lamp lights, the test must be repeated twice.
   If the green lamp does not light after the third attempt, the vacuum chamber must be considered defective.

The vacuum tester VT 60 thus allows in simple manner the fast and reliable testing of high-quality switching devices.

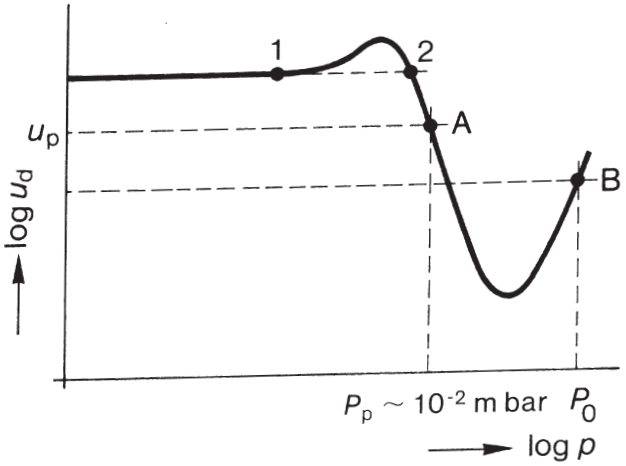

Dielectric strength
as a function
of chamber pressure

P Chamber pressure
P_o Atmospheric pressure
P_p Chamber of pressure
to pass voltage press
U_d Breakdown voltage
U_p Test voltage

Technical data of the vacuum tester VT 60

Mains voltage	adjustable	220 V WS, 120/130 V AC
Mains voltage frequency		50/60 Hz
Output voltage (0 …– 10 %)	adjustable	– 40 kV DC – 60 kV DC
DC voltage ripple		≤ 3 %
Short-circuit current		≤ 33 mA
Discharge time of high-voltage circuit		≤ 0,3 s
Low-voltage fuse		Fine-wire fuse 0,5 A inert
Weight incl. case		ca. 8 kg
Case dimensions		350 x 315 x 175 mm
Test unit design in compliance with DIN VDE 0411, part 1		Safety category

Dimensions and weights

Vacuum circuit-breaker VAA

12 kV, I_{ma} 50 kA, 63 kA, I_n 630 A, 1250 A
17.5 kV, I_{ma} 50 kA, 63 kA, I_n 630 A, 1250 A
24 kV, I_{ma} 40 kA, 63 kA, I_n 630 A, 1250 A

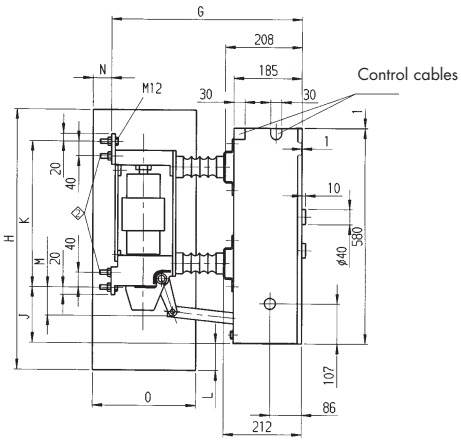

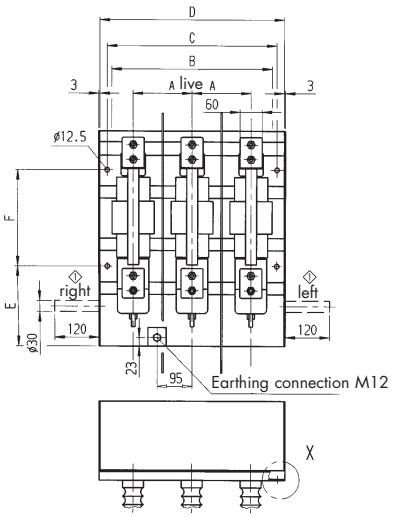

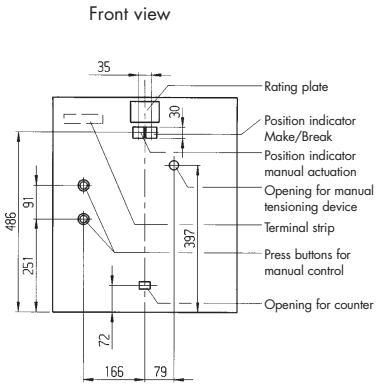

① Shaft extension right-hand side.
Left-hand side or both sides to order only

② Only at 1250 A

Detail X Mounting examples
(plate or bracket and screw are not standard items)

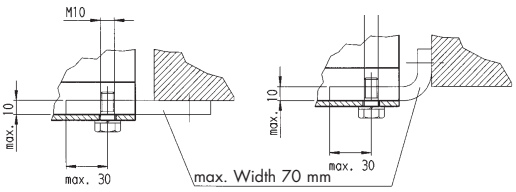

Dimensions subject to change

Type/Rated voltage	Pole centre spacing A	Live B	C	D	E	F	G	J	K	M	Partitions H	L	N	O	Weight approx. kg
VAA 506/12	160	436	460	500	215	260	517	149	394	92	700	72	50	280	105
5012/12	210	536	560	600							–	–	–	–	
VAA 636/12	160	453	460	500	215	260	517	149	394	92	700	72	50	280	105
6312/12	210	453	560	600							–	–	–	–	
VAA 506/17	160	436	460	500	215	260	562	149	394	92	700	72	50	280	105
5012/17	210	536	560	600							–	–	–	–	
	275	666	690	730							–	–	–	–	
VAA 636/17	160	453	460	500	215	260	562	149	394	92	700	72	50	280	105
6312/17	210	553	560	600							–	–	–	–	
	275	666	690	730							–	–	–	–	
VAA 406/24	210	533	560	600	155	342	597	90	476	92	780	132	60	310	105
4012/24	275	663	690	730							–	–	–	–	
VAA6312/24	210	553	560	600	155	342	597	90	476	92	780	132	60	310	105
	275	683	690	730							–	–	–	–	

12 kV, I_{ma} 80 kA, 100 kA, I_n 630 A, 1250 A, 1600 A
17.5 kV, I_{ma} 80 kA, I_n 1250 A, 1600 A

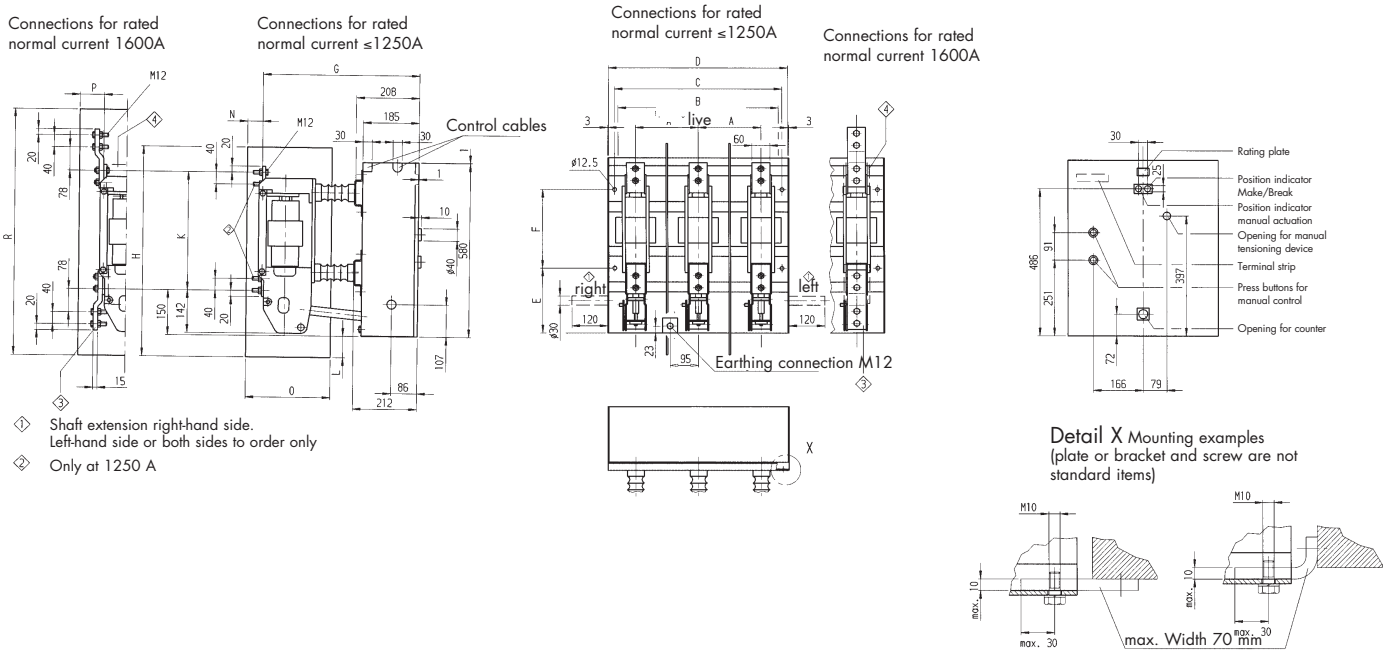

① Shaft extension right-hand side. Left-hand side or both sides to order only

② Only at 1250 A

Dimensions subject to change

Type/Rated voltage	Pole centre spacing A	Live B	C	D	E	F	G	J	K	M	Partitions H	L	N	O	with adapter P	R	Weight approx. kg
VA 806/12 8012/12 8016/12 10012/12 10016/12	210	553	560	600	215	260	517	149	394	142							115
VA 8012/ 17	160	443	460	500						*	700	–	50	280	–	–	
	210	533	560	600	215	260	562	149	394	142	–	–	–	–	–	–	115
	275	683	690	600							–	–	–	–	–	–	
VA 8016/ 17	210	533	560	600	215	260	562	149	394	142	700	72	50	280	20	700	115

*to order

12 kV, I_{ma} 80 kA, 100 kA, I_n 2000 A, 2500 A, 3000A, 3150 A
17.5 kV, I_{ma} 63 kA, 80 kA, I_n 2000 A, 2500 A, 3000A, 3150 A

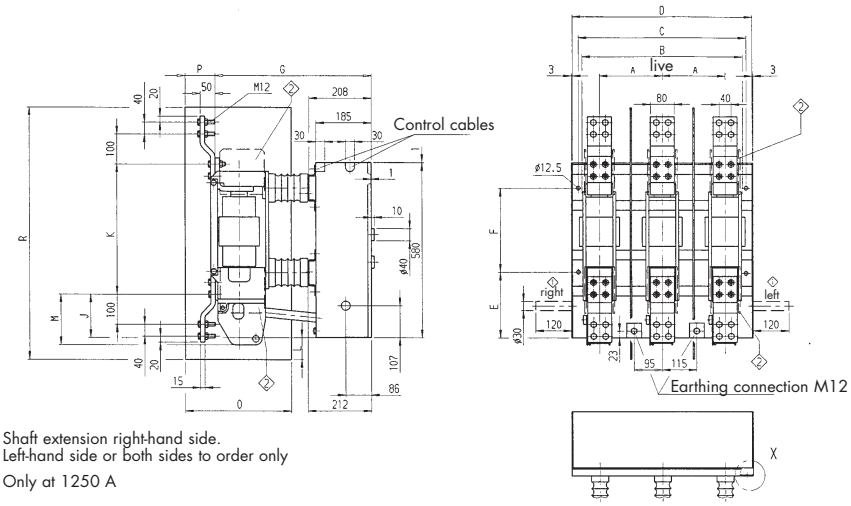

① Shaft extension right-hand side.
Left-hand side or both sides to order only

② Only at 1250 A

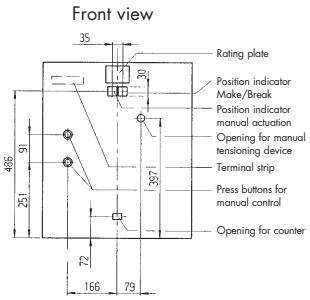

Detail X Mounting examples
(plate or bracket and screw are not standard items)

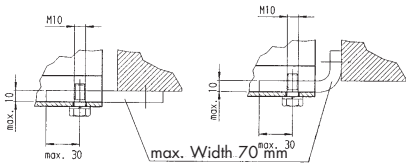

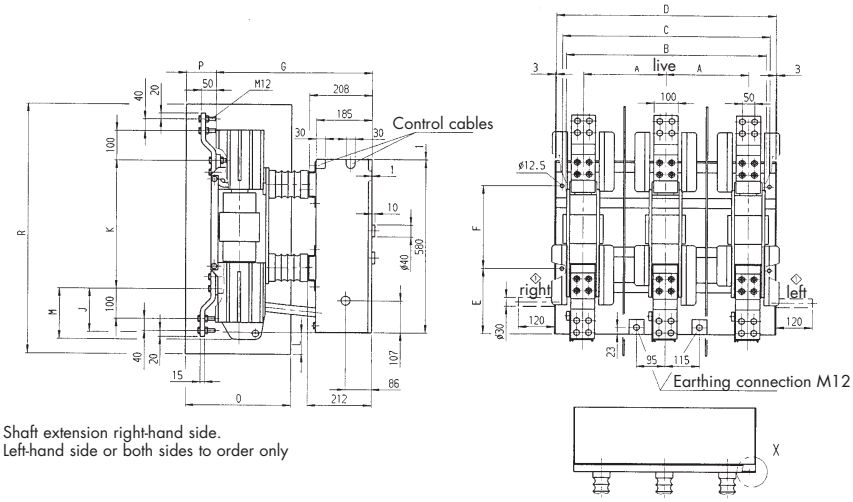

① Shaft extension right-hand side.
Left-hand side or both sides to order only

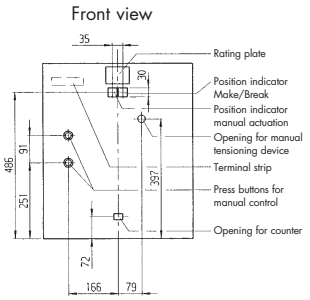

Type/Rated voltage	Pole centre spacing A	Live B	C	D	E	F	G	J	K	M	Partitions H	L	N	O	with adapter P	R	Weight approx. kg
VA 8020/12 8025/12 10020/12 10025/12	210	553	560	600	219	277	520	145	430	169							125
VA8031/12*	210	574	560	600	219	277	520	145	430	169	–	116	–	315	61	890	
VA 8031/12 VA10031/12	275	740	690	730	219	277	520	145	430	169	–	91	–	290	56	874	135
VA 6320/17 VA 8020/17 VA 8025/17	210	553	560	600	219	277	565	145	430	169	–	73		353	100	838	130
VA8031/17*	210	574	560	600	219	277	565	145	430	169		124		555	210	960	200
VA 8031/17	275	740	690	730	219	277	565	145	430	169		91		290	56	874	

*I_n = 3000A

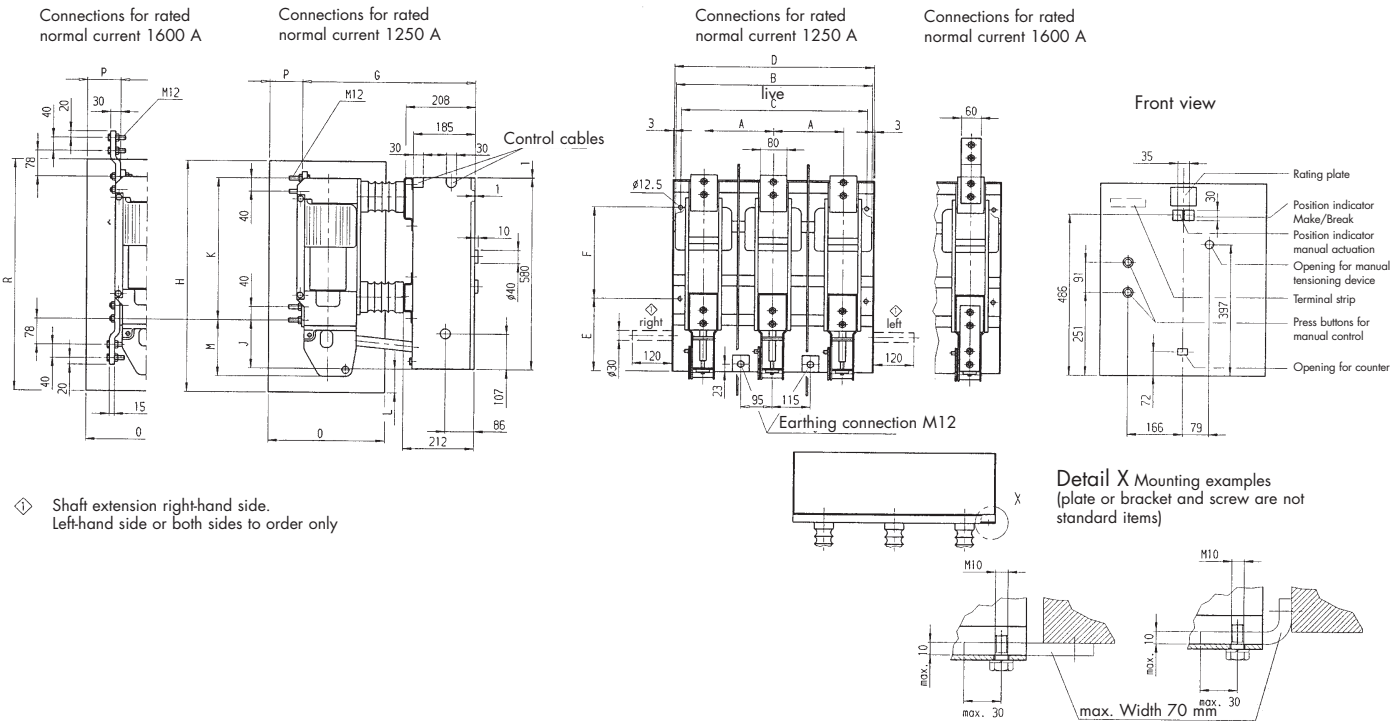

① Shaft extension right-hand side.
Left-hand side or both sides to order only

Dimensions subject to change

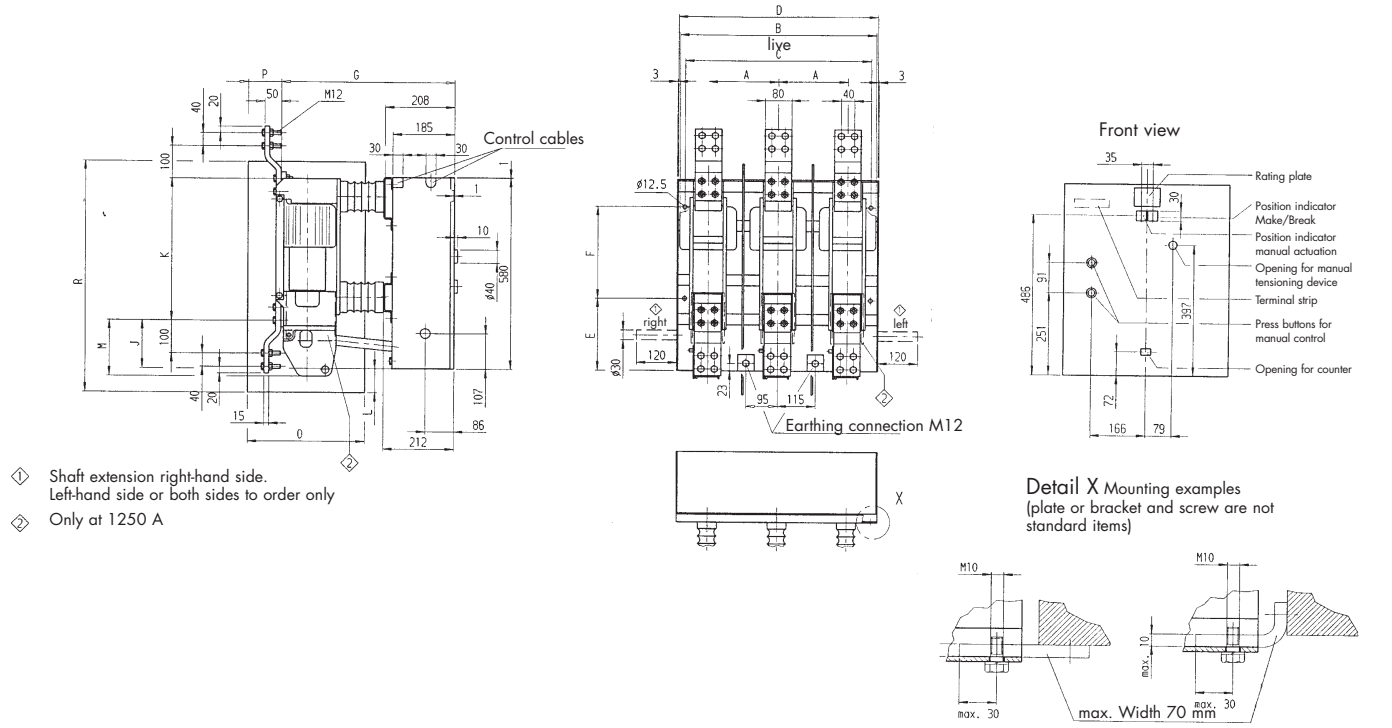

① Shaft extension right-hand side.
Left-hand side or both sides to order only

② Only at 1250 A

Dimensions subject to change

Type/Rated voltage	Pole centre spacing A	Live B	C	D	E	F	G	J	K	M	Partitions H	L	N	O	with adapter P	R	Weight approx. kg
VA 12512/12	210	590	560	600	219	277	520	145	430	169	700	56	–	280	27	–	170
VA 12516/12											–	56	–	280	27	700	
VA 12520/12											–	56	–	280	27	700	
VA 12525/12											–	56	–	280	27	700	

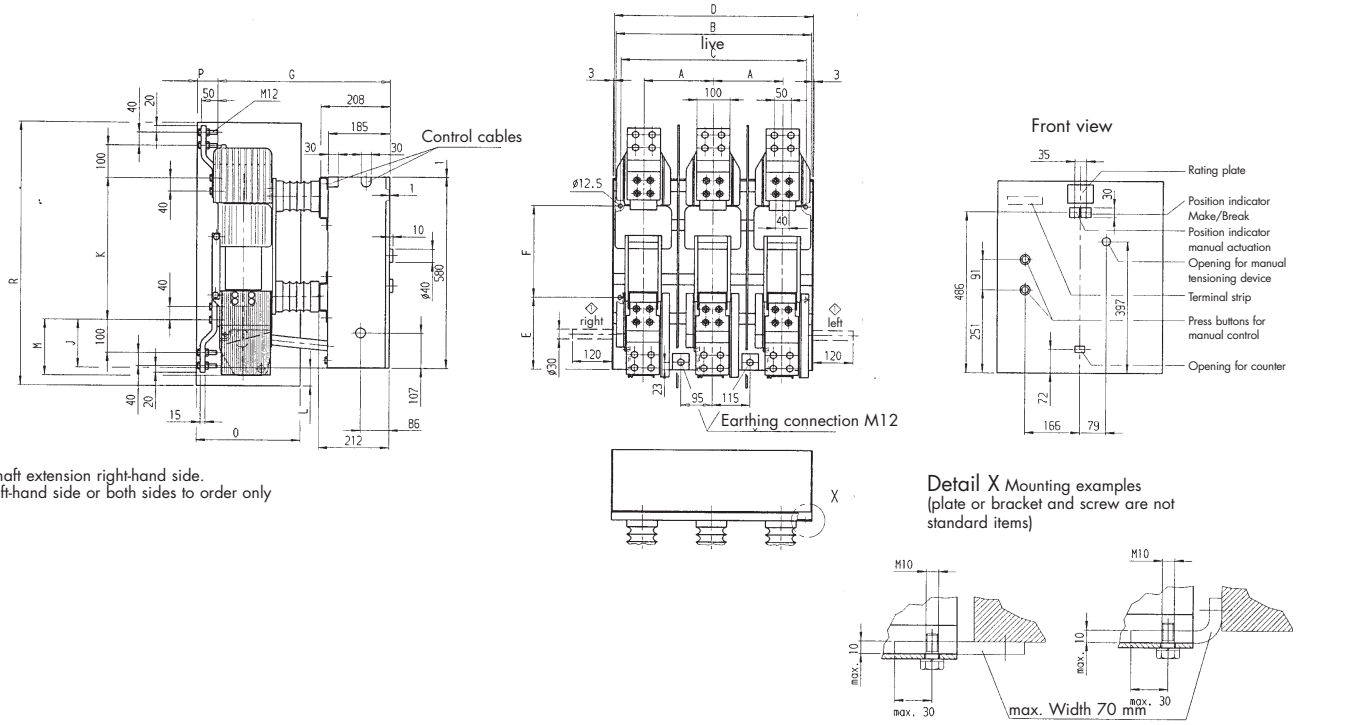

① Shaft extension right-hand side.
Left-hand side or both sides to order only

Dimensions subject to change

Type/Rated voltage	Pole centre spacing A	Live B	C	D	E	F	G	J	K	M	Partitions H	L	N	O	with adapter P	R	Weight approx. kg
VA 12531/12	210	590	560	600	219	277	520	145	430	169	–	55	–	315	62	800	185
	275	720	690	730							–	55	–	280	27	777	

Vacuum circuit-breaker VA
VXC

24 kV, I_{ma} 63 kA, 80 kA, 100 kA, I_n 1600 A, 2000 A, 2500 A
24 kV, I_{ma} 63 kA, I_n 1250A, 2500A

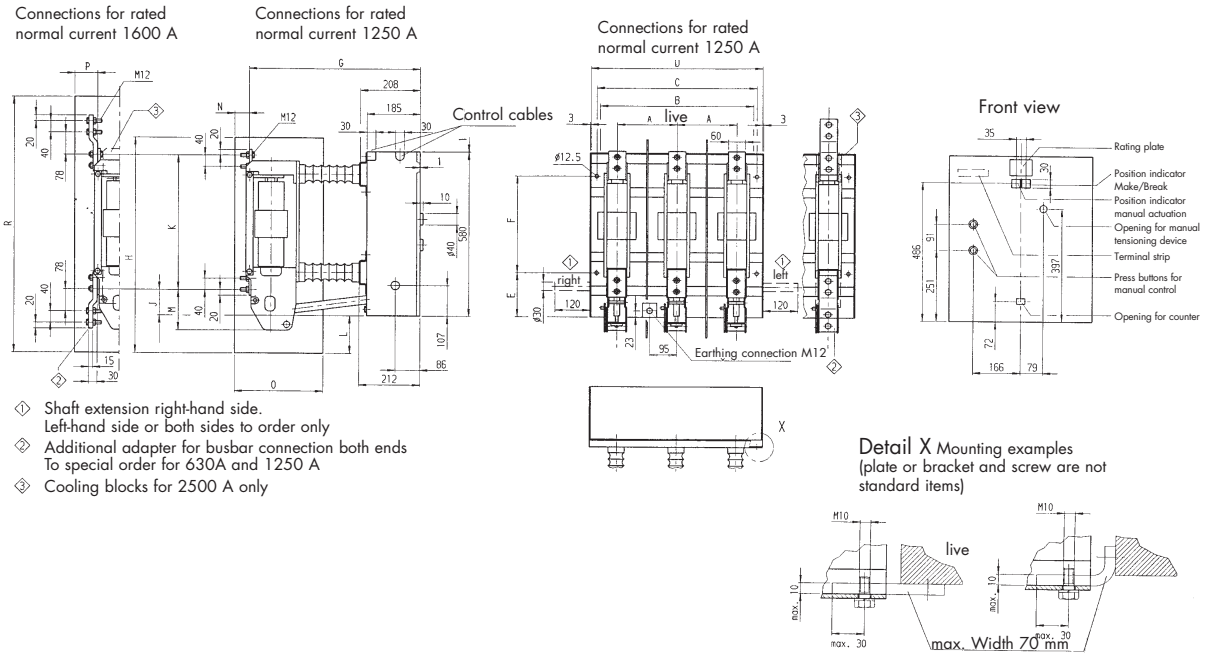

① Shaft extension right-hand side. Left-hand side or both sides to order only
② Additional adapter for busbar connection both ends To special order for 630A and 1250 A
③ Cooling blocks for 2500 A only

Dimensions subject to change

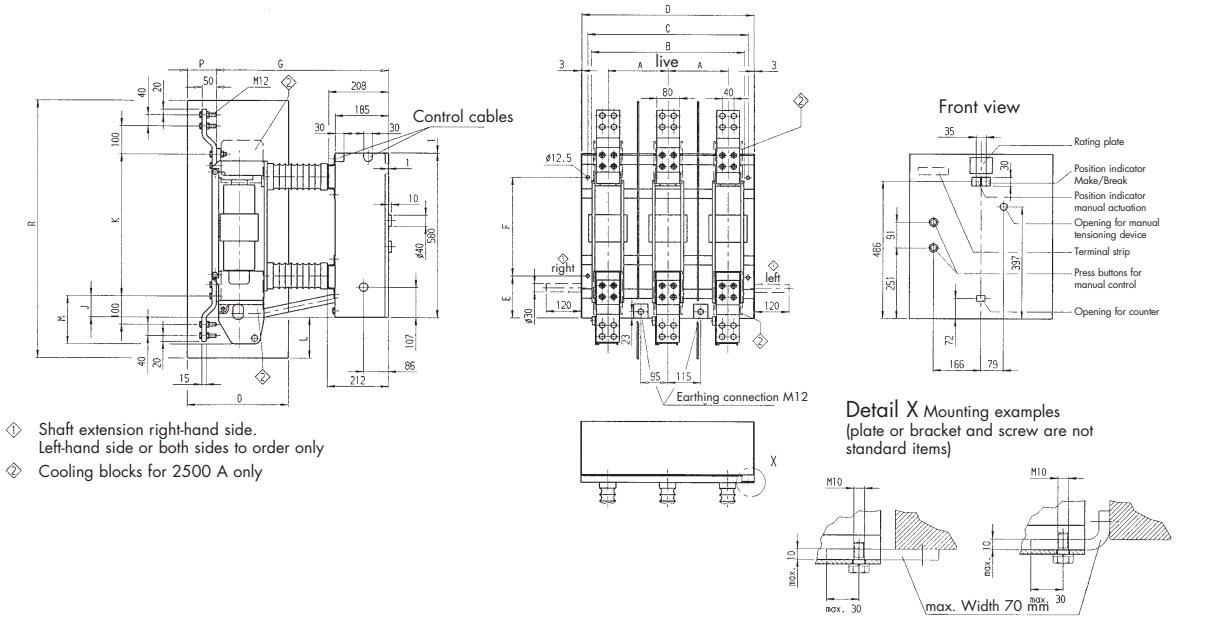

① Shaft extension right-hand side. Left-hand side or both sides to order only
② Cooling blocks for 2500 A only

Dimensions subject to change

Type/Rated voltage	Pole centre spacing A	Live B	C	D	E	F	G	J	K	M	Partitions H	L	N	O	with adapter P	R	Weight approx. kg
VA 6316/24	210	553	560	600	155	342	597	90	476	142	780	132	60	310	–	–	122
VXC 6312/24	275	683	690	730							–	–	–	–	–	–	
VA 6320/24	210	553	560	600	149	347	600	75	500	169	–	173	–	360	107	995	130
8020/24	275	683	690	730							–	–	–	–	–	–	
10020/24																	
VA 6325/24	210	553	560	600	149	347	600	75	500	169	–	110	–	390	110	980	130
8025/24	275	683	690	730							–	–	–	–	–	–	
10025/24																	

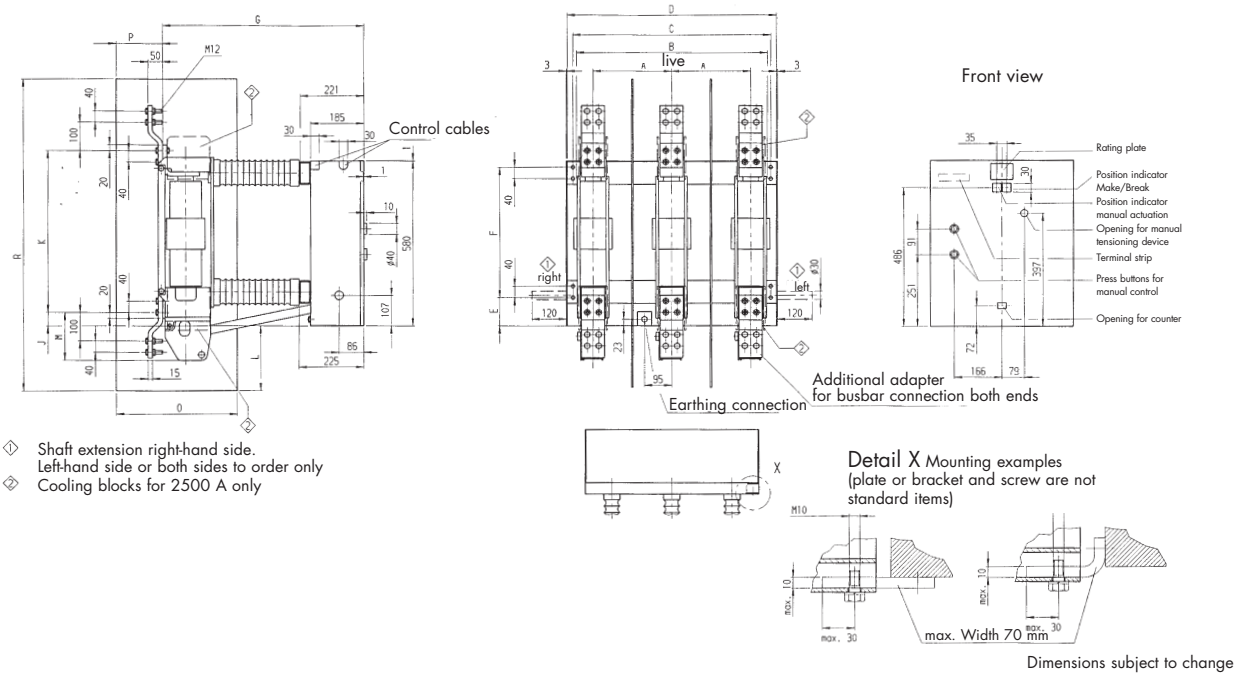

① Shaft extension right-hand side. Left-hand side or both sides to order only
② Cooling blocks for 2500 A only

Type/Rated voltage	Pole centre spacing A	Live B	C	D	E	F	G	J	K	M	Partitions H	L	N	O	with adapter P	R	Weight approx. kg
VA 8020/36	275	686	690	730	82	476	703	30	587	169	–	213	–	420	160	1100	160
VA 10020/36	400	936	940	980							–	–	–	–	–	–	
VA 8025/36 VA 10025/36 VXC 6325/36 VXC 8025/36	400	936	940	980	82	476	703	30	587	169	–	213	–	420	160	1100	160
VA 8012/36 VXC 6312/36	275	686	690	730	82	476	703	30	587	169	–	213	–	390	110	980	160

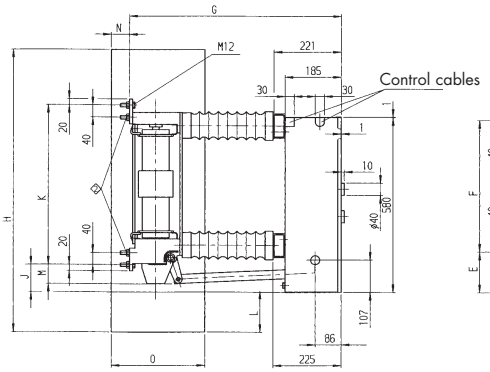

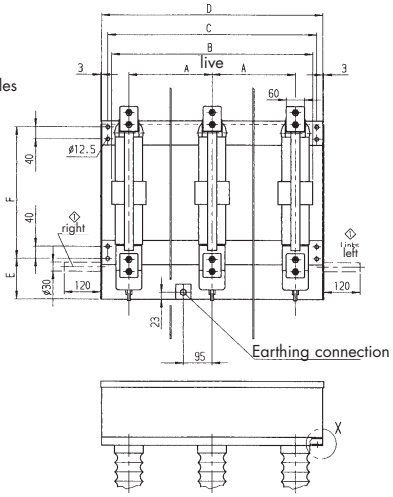

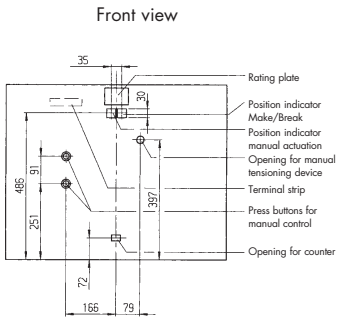

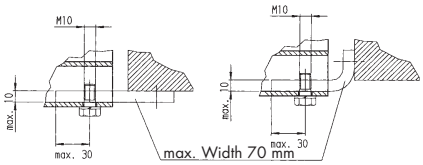

① Shaft extension right-hand side.
Left-hand side or both sides to order only
② Cooling blocks for 2500 A only

Detail X Mounting examples
(plate or bracket and screw are not standard items)

Dimensions subject to change

Type/Rated voltage	Pole centre spacing A	Live B	C	D	E	F	G	J	K	M	Partitions H	L	N	O	Weight approx. kg
VAA 406/36	275	665	690	730	135	436	705	90	529	68	980	94	108	390	125
VAA4012/36	400	915	940	980							–	–	–	–	
VAA6312/36															

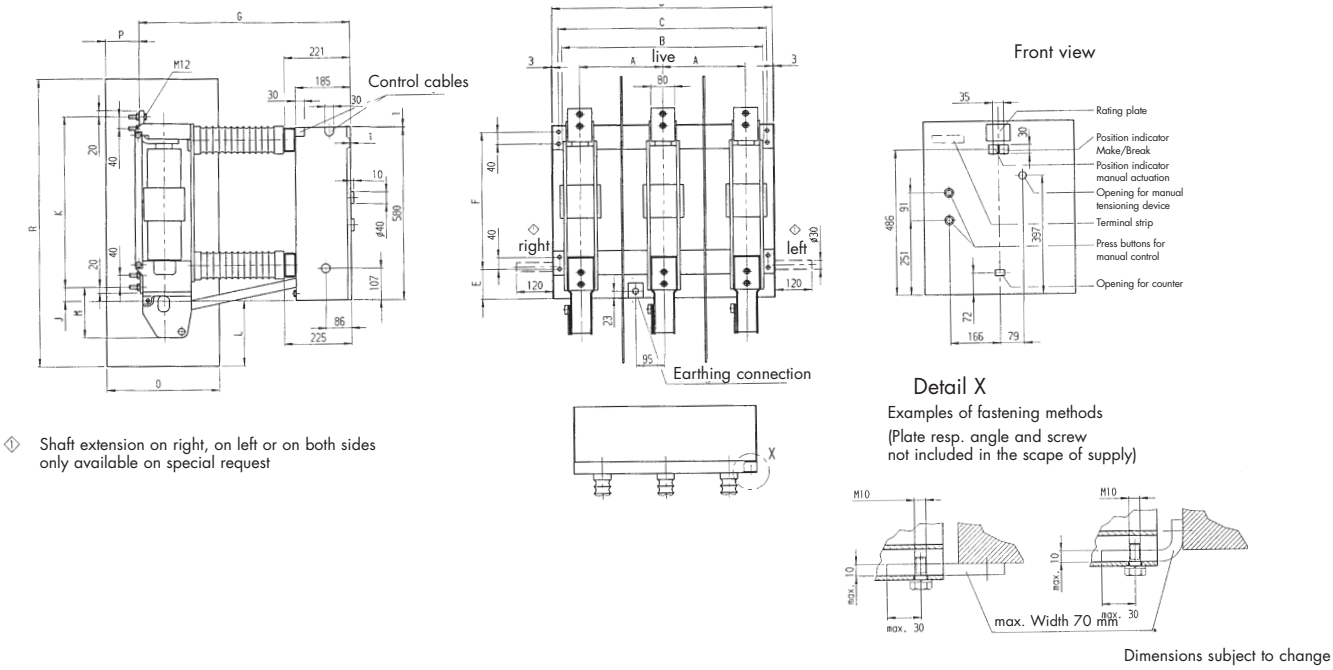

① Shaft extension on right, on left or on both sides only available on special request

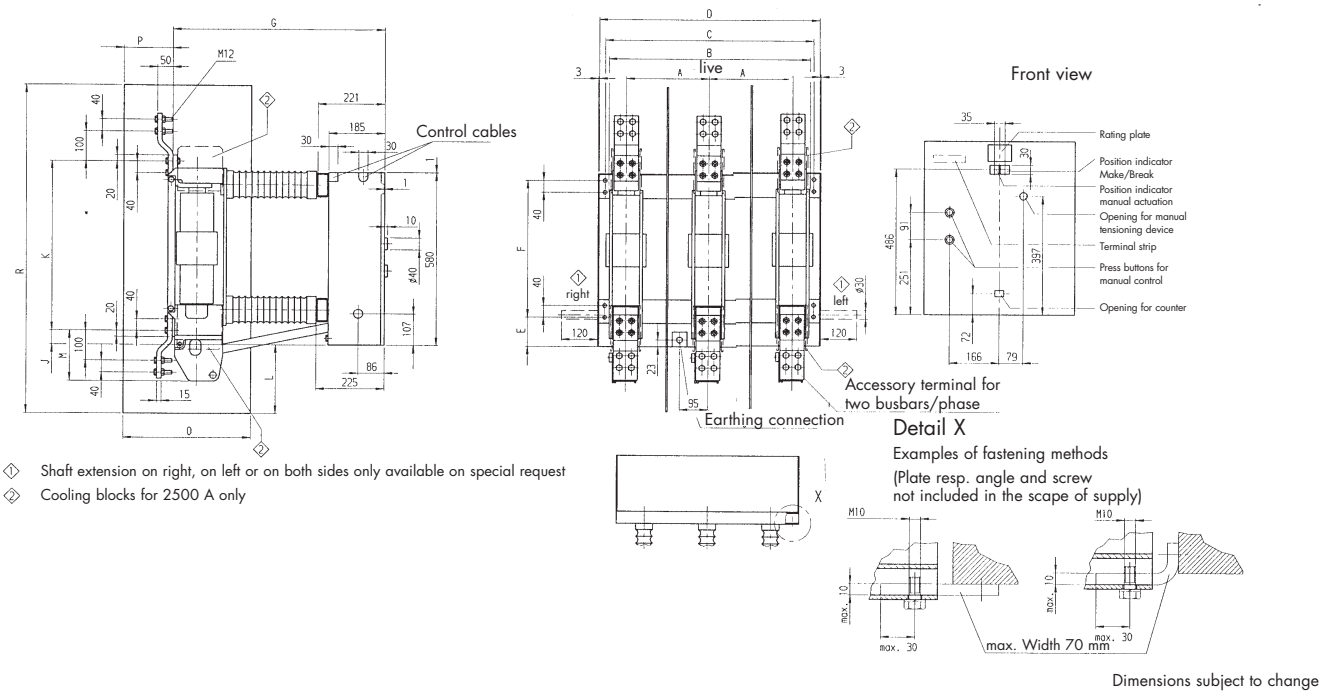

① Shaft extension on right, on left or on both sides only available on special request
② Cooling blocks for 2500 A only

Type/Rated voltage	Pole centre spacing A	Live B	C	D	E	F	G	J	K	M	Partitions H	L	N	O	with adapter P	R	Weight approx. kg
VXC 6312/38 VXC 8012/38	400	936	940	980	82	501	903	30	587	169	–	213	–	390110	980	150	
VXC 6325/38 VXC 8025/38	400	936	940	980	82	501	903	30	587	169	–	213	–	420160	1100	150	

Vacuum circuit-breaker VXA

17.5 kV, I_{ma} 50 kA, 63 kA, I_n 1600 A
17.5 kV, I_{ma} 80 kA, 100 kA, 2000 A, 2500 A
27 kV, I_{ma}, 63 kA, 80 kA, I_n 1600 A

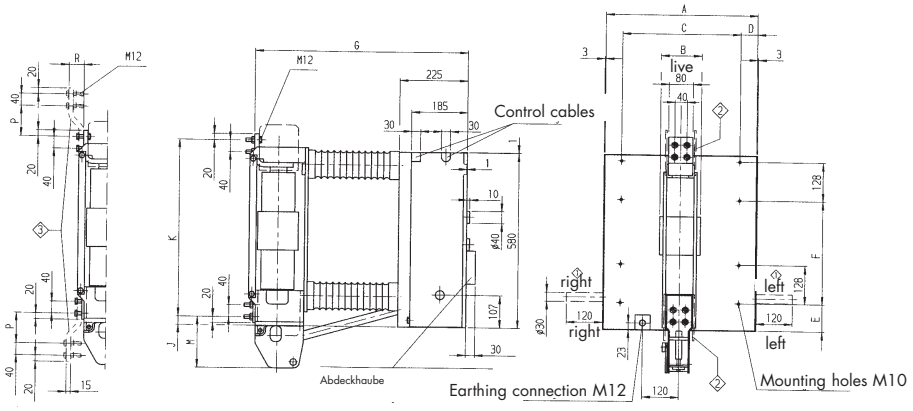

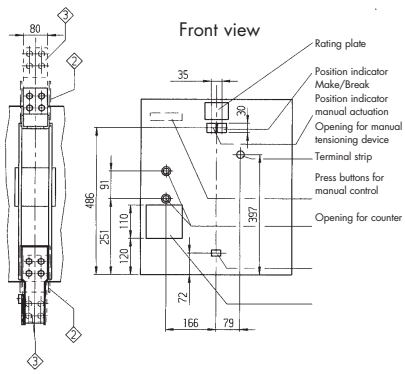

1. Shaft extension on right, on left or on both sides only available on special request
2. Cooling blocks for 2500 A only
3. Additional adapter for busbar connection both ends only available on special request
4. Gegen Erde 125/50 kV, über die Schaltstrecke 170/170 kV

Detail X

Examples of fastening methods
(Plate resp. angle and screw not included in the scape of supply)

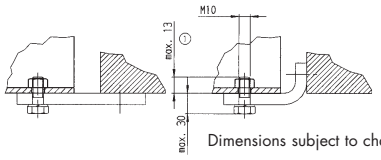

Dimensions subject to change

Type/Rated voltage	Pole centre spacing A	Live B	C	D	E	F	G	J	K	M	Partitions H	L	N	O	with adapter P	R	Weight approx. kg
VXA 5016/17 6316/17 8020/17 8025/17	500	134	390	55	90	342	703	27	587	169	–	–	–	–	100	50	150
VXA 10020/17 10025/17	500	170	367	55	90	342	743	219	1052	–	–	–	–	–	–	–	180
	Dimensions to order																
VXA 6316/27 8016/27	500	134	390	55	90	342	703	27	587	169	–	–	–	–	100	50	150

Front view

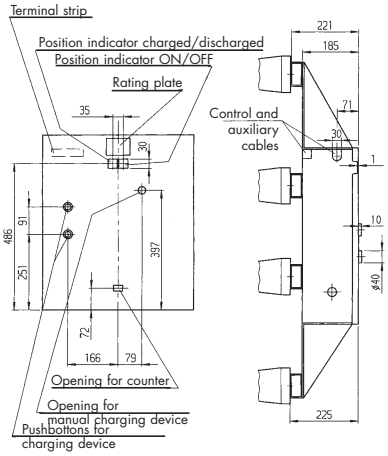

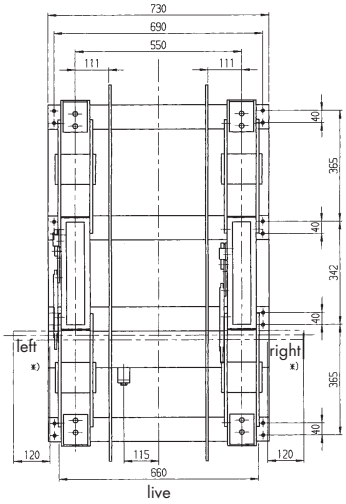

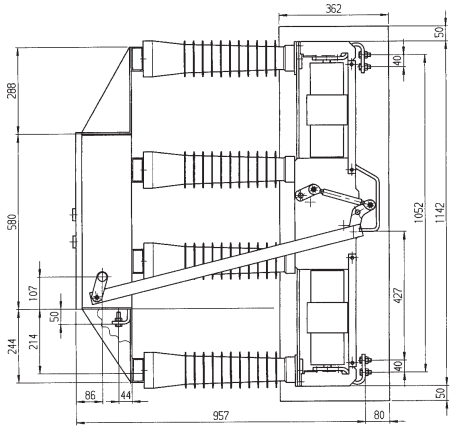

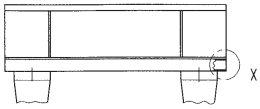

Detail X M 1:2

Examples of fastening methods

(Plate resp. angle and screw not included in the scape of supply)

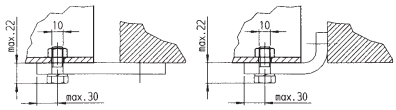

x) Shaft extension on right, on left or on both sides only available on special request

xx) Earthing screw

Dimensions subject to change

Weight 250 kg

Dimensions to order

South East Asia
Tel.: +65 67 49 07 77 - Fax: +65 68 41 95 55

Pacific
Tel.: +65 67 49 07 77 - Fax: +65 68 46 17 95

China
Tel.: +86 10 64 10 62 88 - Fax: +86 10 64 10 62 64

India
Tel.: +91 11 64 49 907 - Fax: +91 11 64 49 447

North America
Tel.: +1 (484) 766-8100 - Fax: +1 (484) 766-8120

Central America
Tel.: +52 55 11 01 07 00 - Fax: +52 55 26 24 04 93

South America
Tel.: +55 11 30 69 08 01 - Fax: +55 11 30 69 07 93

France
Tel.: +33 1 40 89 66 00 - Fax: +33 1 40 89 67 19

British Isles
Tel.: +44 17 85 27 41 08 - Fax: +44 17 85 27 45 74

Northern Europe
Tel.: +49 69 66 32 11 51 - Fax: +49 69 66 32 21 54

Central Europe & Western Asia
Tel.: +48 22 850 96 00 - Fax: +48 22 654 55 90

Near & Middle East
Tel.: +971 6 556 3971 - Fax: +971 6 556 5133

Mediterranean, North & West Africa
Tel.: +33 1 41 49 20 00 - Fax: +33 1 41 49 24 23

Southern & Eastern Africa
Tel.: +27 11 82 05 111 - Fax: +27 11 82 05 220

ALSTOM

www.tde.alstom.com

SW.06.05/0203 E

T&D/BPROB/MVS-CBVA/eng/MVB/02.03/DE/4053/© ALSTOM 2003/Concept und Creation: SCHREML Werbeagentur