DIRECTION
DES ÉTUDES ET RECHERCHES
LES LABORATOIRES DE GÉNIE ÉLECTRIQUE
LES RENARDIÈRES

EDF Electricité de France

cofrac
ACCREDITATION N° 1-0120 PORTEE COMMUNIQUEE SUR DEMANDE
ESSAIS

RAPPORT D'ESSAIS / *TEST REPORT*
HM22/21-011/1

APPAREIL	***/ APPARATUS***	:	**CCV 245**	
TENSION ASSIGNÉE PRIMAIRE	***/ RATED PRIMARY VOLTAGE***	:	$\frac{220}{\sqrt{3}}$	**kV**
FRÉQUENCE ASSIGNÉE	***/ RATED FREQUENCY***	:	**50**	**Hz**

CONSTRUCTEUR/ *MANUFACTURER* : **ALSTOM - BALTEAU**

OBJET / *OBJECT* : **DIÉLECTRIQUES**

DEMANDEUR DES ESSAIS / *TESTED FOR* : **TIERS/FRANCAIS**

DATE(S) ET LIEU DES ESSAIS / *DATE(S) AND PLACE OF TESTS* : **From 27/11/2000 to 01/12/2000**
LES RENARDIÈRES - L.G.E. - SEDM

ESSAIS RÉALISÉS SUIVANT / *TESTS CARRIED OUT ACCORDING TO* : **CEI 60186 ÉD. 2 + AM 2**
38/249/CDV (CEI 60044-5 ÉD. 1.0)

LE RAPPORT EST COMPOSÉ DES DOCUMENTS SUIVANTS / *THE REPORT COMPRISES THE FOLLOWING DOCUMENTS :*

- CARACTÉRISTIQUES DE L'APPAREIL / *CHARACTERISTICS OF THE APPARATUS* : PAGE 3
- LISTE DES ESSAIS EFFECTUÉS / *LIST OF TESTS PERFORMED* : PAGE 5/6
- CONDITIONS DES ESSAIS / *TESTS CONDITIONS* : PAGES 7-26
- TABLEAUX ET RÉSULTATS D'ESSAIS / *TABLES AND TESTS RESULTS* : PAGES 7-26
- PHOTOGRAPHIE / *PHOTOGRAPH* : PAGE 4
- OSCILLOGRAMMES / *OSCILLOGRAMS* : PAGES 29-31

CE RAPPORT COMPREND 31 PAGES / *THIS REPORT INCLUDES* 31 *PAGES/*

LA REPRODUCTION DE CE RAPPORT D'ESSAIS N'EST AUTORISÉE QUE SOUS LA FORME DE FAC-SIMILÉ PHOTOGRAPHIQUE INTÉGRAL, AVEC L'ACCORD ÉCRIT DU LABORATOIRE ET DU DEMANDEUR DES ESSAIS.
REPRODUCTION OF THIS TEST REPORT IS AUTHORIZED ONLY IN THE FORM OF A COMPLETE PHOTOGRAPHIC FACSIMILE WITH THE WRITTEN AUTHORIZATION OF THE LABORATORY AND THE APPLICANT.

LE RESPONSABLE DES ESSAIS,
EXECUTIVE RESPONSIBLE FOR THE TESTS,

SYLVAIN SURIER

LE CHEF DE LA STATION D'ESSAIS
TESTING MANAGER,

PHILIPPE EGROT

Les Renardières, le 8/1/2001

© Copyright EDF 2001

LGE - STATION D'ESSAIS DE PUISSANCE - LES RENARDIERES - ÉCUELLES - 77818 MORET-SUR-LOING CEDEX - FRANCE - TEL : 01 60 73 62 21 - FAX : 01 60 73 68 22 - E-mail : Josiane.Parsot@edfgdf.fr
LGE - STATION D'ESSAIS D'ELECTRIQUES ET MECANO-CLIMATIQUES - LES RENARDIERES - ECUELLES - 77818 MORET-SUR-LOING CEDEX - FRANCE - TEL : 01 60 73 65 75 - FAX : 01 60 73 69 56 - E-mail : Monique.Alame@edfgdf.fr

- **Les Laboratoires de Génie Electrique - Les Renardières** (LGE) sont accrédités par **le Comité Français d'Accréditation (COFRAC)** : l'accréditation par la Section Essais du COFRAC atteste uniquement de la compétence technique des Laboratoires pour les essais couverts par l'accréditation.

- De plus, les Laboratoires sont rattachés au STL, "Short-Circuit Testing Liaison", association internationale de collaboration entre organismes d'essais, par l'intermédiaire de l'ESEF "Ensemble des Stations d'Essais à grande puissance Françaises", membre français de cette association.

- A ce titre, **les Laboratoires de Génie Electrique** émettent deux types de documents selon les règles et recommandations du STL.

1 - CERTIFICAT D'ESSAI DE TYPE OU DE PERFORMANCE

Un certificat présente les résultats d'une série d'essais de type selon une norme reconnue.

L'appareil essayé a satisfait aux exigences de cette norme et par conséquent les caractéristiques assignées par le constructeur sont ratifiées par **les Laboratoires de Génie Electrique - Les Renardières**.

2 - RAPPORT D'ESSAIS

Un rapport d'essais présente les résultats d'un ou plusieurs essais exécutés selon les instructions du client. Ces essais peuvent être conformes à une norme reconnue.

Les résultats ne vérifient pas nécessairement les caractéristiques assignées par le constructeur.

Dans les deux cas, les documents émis ne concernent que les objets soumis aux essais.

- ***Les Laboratoires de Génie Electrique - Les Renardières*** *(LGE) are accredited by* ***the Comité Français d'Accréditation (COFRAC)****. COFRAC Section Essais accreditation only attests the technical capability of the Laboratories for the tests covered by the accreditation.*

- *In addition, the Laboratories are linked to the STL, "Short-Circuit Testing Liaison" an international association for cooperation between testing organisations, through the intermediary of the ESEF "Ensemble des Stations d'Essais à grande puissance Françaises" (Group of French Test Centres), which is the French member of this association.*

- *In this context,* ***les Laboratoires de Génie Electrique*** *issue two types of documents according to the rules and recommendations of the STL.*

1 - TYPE TEST CERTIFICATE OR CERTIFICATE OF PERFORMANCE

A certificate presents the record of a series of type tests according to a recognized standard.

The equipment tested has fulfilled the requirements of this standard and consequently the rated characteristics stated by the manufacturer are ratified by ***les Laboratoires de Génie Electrique - Les Renardières.***

2 - TEST REPORT

A test report presents the record of one or more tests carried out according to the customer's instructions. These tests may comply with a recognized standard.

The results do not necessarily verify the rated characteristics stated by the manufacturer.

In both cases, the documents issued relate only to the items presented for testing.

Ce document a un caractère purement technique. Il n'implique de la part d'EDF aucun engagement de consultation, d'appel d'offres ou de commande sur le matériel concerné.

This document is of a purely technical nature. It does not imply any commitment for EDF relating to any enquiry, call for tenders or order for the equipment concerned.

DOCUMENTS DE RÉFÉRENCE / *RÉFÉRENCE DOCUMENTS :*

Documents normatifs / *Standard documents* :

- CEI 60186 éd. 2 1987 + Am 2 1995-09
- CEI 60358 éd. 2 1990/05
- CEI 38/249/CDV (CEI 60044-5 éd 1.0)
- ANSI C93.1 1990

Document d'iditentification du matériel / ***Identification file of aparatus*** :
Plan référence 8 162 976 du 13/06/00 / *Plan reference 8 162 976 dated on 13/06/00*

Demande d'essais / ***Test demand*** :
E-mail de alain.jounay@tde.alstom.com daté du 22/09/2000 / *E-mail from alain.jounay@tde.alstom.com dated on 22/09/2000*

Devis / ***Test proposition*** :
télécopie EDF LGE réf. M22/JDF/11/10/00 14:22 / *fax from EDF LGE ref. M22/JDF/11/10/00 14:22*

Commande / ***Order*** :
réf. Alstom R08541H du 20/10/00 / *Alstom's ref. R08541H dated on 20/10/00*

Programme d'Essais / ***Tests program*** :
Du 221/11/00 réf. HM22/21-011/1 / *Dated on 11/22/00 ref. HM22/21-011/1*

Interlocuteurs en rapport avec les laboratoires / ***External contacts with the laboratory*** :

EN CHARGE DE L'AFFAIRE CHEZ LE DEMANDEUR /
RESPONSIBLE FOR CO-ORDINATION OF TESTS FOR THE APPLICANT : M. JOUNAY (ALSTOM)

PRÉSENT AUX ESSAIS / *PRESENT FOR THE TESTS* : M. JOUNAY (ALSTOM)

Intervenants des laboratoires / ***Laboratory staff*** :

RESPONSABLE DES ESSAIS / *TESTS RESPONSIBLE* : S. SURIER

AGENT(S) TECHNIQUE(S) D'ESSAI / *TECHNICIAN(S) FOR TESTS* : E. TREPAT

NOM ET ADRESSE DU CHARGÉ D'AFFAIRE, RESPONSABLE DE LA COORDINATION DES ESSAIS /
NAME AND ADRESS OF ENGINEER RESPONSIBLE FOR CO-ORDINATION OF TESTS :

M. J. DI FRANCESCO ☎ 01 60 73 62 21
EDF - Pôle Industrie - Division Recherche et Développement
Laboratoires de Génie Electrique (LGE)
Les Renardières - Ecuelles - 77818 Moret-sur-Loing Cedex . FRANCE
Téléphone : 01 60 73 62 00 Télex 690 669 F EDF-LEP

Station d'Essais de Puissance *Tél. 01 60 73 62 27* *Télécopie 01 60 73 68 22*
Station d'Essais Diélectriques et Mécanoclimatiques *Tél. 01 60 73 66 51* *Télécopie 01 60 73 69 56*

Diffusion :

Original : Chef Adjoint du LGE puis Responsable d'Essais:
(1) Chef de Service Adjoint puis archives LGE
(2) Demandeur : ALSTOM - BALTEAU - M. JOUNAY
(2) Chargé d'Affaires
(1) Equipe Essais : Emmanuel TREPAT

CARACTÉRISTIQUES DE L'APPAREIL / *APPARATUS CHARACTERISTICS*

Dénomination / *Name* : **Transformateur Condensateur de Tension** / *Capacitor Voltage Transformer*

Type / *Type* :	CCV 245 / *CCV 245*
N° série / *Serial number* :	00-XE912001/001
Année de fabrication / *Construction year* :	2000
Bornes / *Terminals* :	A - N a - n
Tensions assignées / *Rated voltage* :	$\frac{220000}{\sqrt{3}}$ $\frac{100}{\sqrt{3}}$
Puissance et classe de précision / *Power and accuracy class* :	75 VA - cl 0.5 / 3P
Puissance d'échauffement / *Temperature-rise burden* :	500 VA
Facteur de tension / *Rated voltage factor* :	1,5 Un - 30 s
Niveau d'isolement / *Insulation level* :	245 / 460 / 1050 kV
Capacité totale / *Rated capacitance* :	4400 pF
Fréquence assignée / *Rated frequency* :	50 Hz
Masse totale / *Weight* :	320 kg
Fabrication / *Manufacturer* :	ALSTOM MONTROUGE

IDENTIFICATION DE L'APPAREIL / *APPARATUS IDENTIFICATION*

Vérification des cotes principales du plan référence 8 162 976 donné en annexe 1 (voir page 28). / *Verification of principal sizes mentionned on drawing referenced 8 162 976 given in appendix 1 (see page 28).*

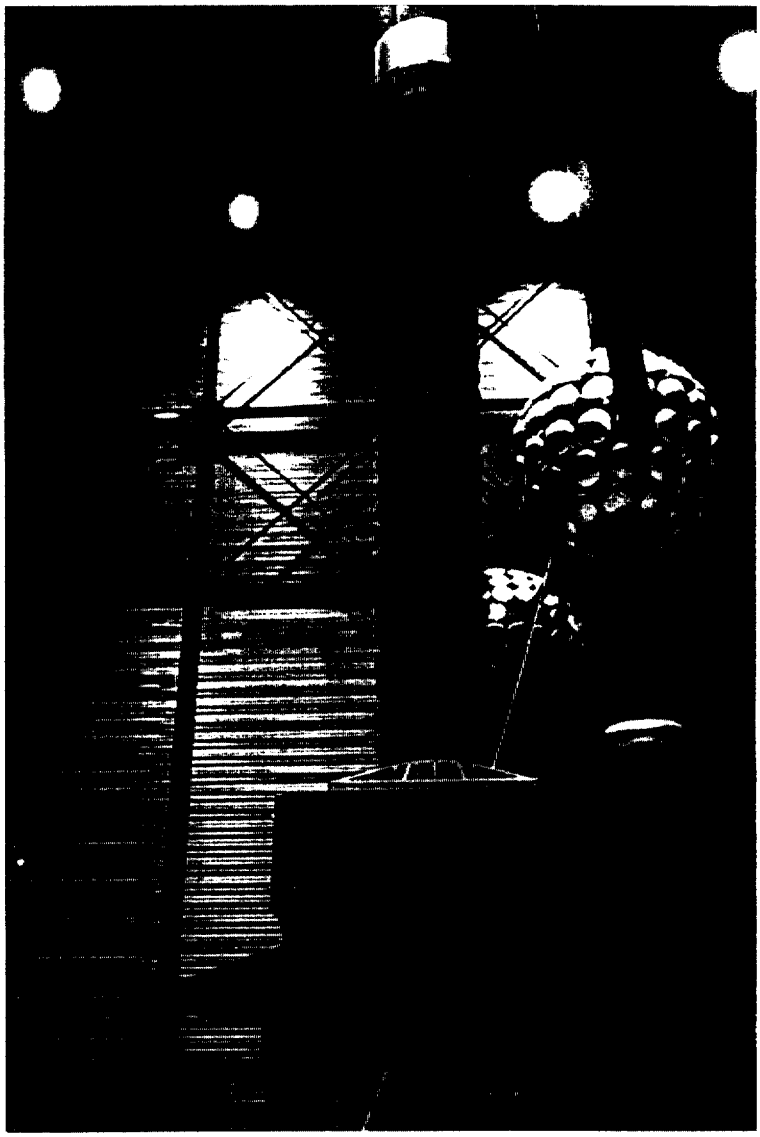

Photographie de l'appareil en essai / *Photograph of the apparatus under test*

CHRONOLOGICAL LIST OF TESTS PERFORMED

REFERENCES	TYPE OF TESTS	PLACE AND DATE OF TESTS (1)	PAGE N°	OBSERVATIONS
NEMA 107 ANSI C93.1-1990	Radio Interference Voltage test	Hall 420 kV 11/28/00	8-12	With electromagnetic unit
CEI 60 694 §6.3 et 38/249/CDV (Projet CEI 60044-5 ed1.0) §8.10	Radio Interference Voltage test	Hall 420 kV 11/28/00	14-16	With electromagnetic unit
CEI 60358 éd. 2 §7 et §8	Capacitance and capacitor losses (tangent δ) measurement before dielectric tests	Hall 420 kV 11/29/00	18	Electromagnetic unit disconnected
CEI 60186 §50 et Am. 2 §18	Full and chopped impulse test on capacitor voltage dividers	Hall 420 kV 30/11/00	20-22	With electromagnetic unit
CEI 60358 éd. 2 §9.2.2 et CEI 60186 Am. 2 §14	Wet power frequency whistand test of the capacitor voltage divider	Hall 420 kV 04/12/00	24-26	Without electromagnetic unit
CEI 60358 éd. 2 §7 et §8	Capacitance and capacitor losses (tangent δ) measurement after dielectric tests	Hall 420 kV 05/12/00	18	Without electromagnetic unit

RADIO INTERFERENCE VOLTAGE MEASUREMENT according to NEMA 107 and ANSI C93.1-1990

1 - Test conditions :

No correction for atmospheric conditions is applied. Tests are performed on whole apparatus.

The measurement frequency is 1 MHz (Rhode & Schwartz meter).

Tests are performed by applying the following conditions and procedure.

2 - Measuring circuit

It is according to the NEMA 107 figure 3.1 and 3.3.a.

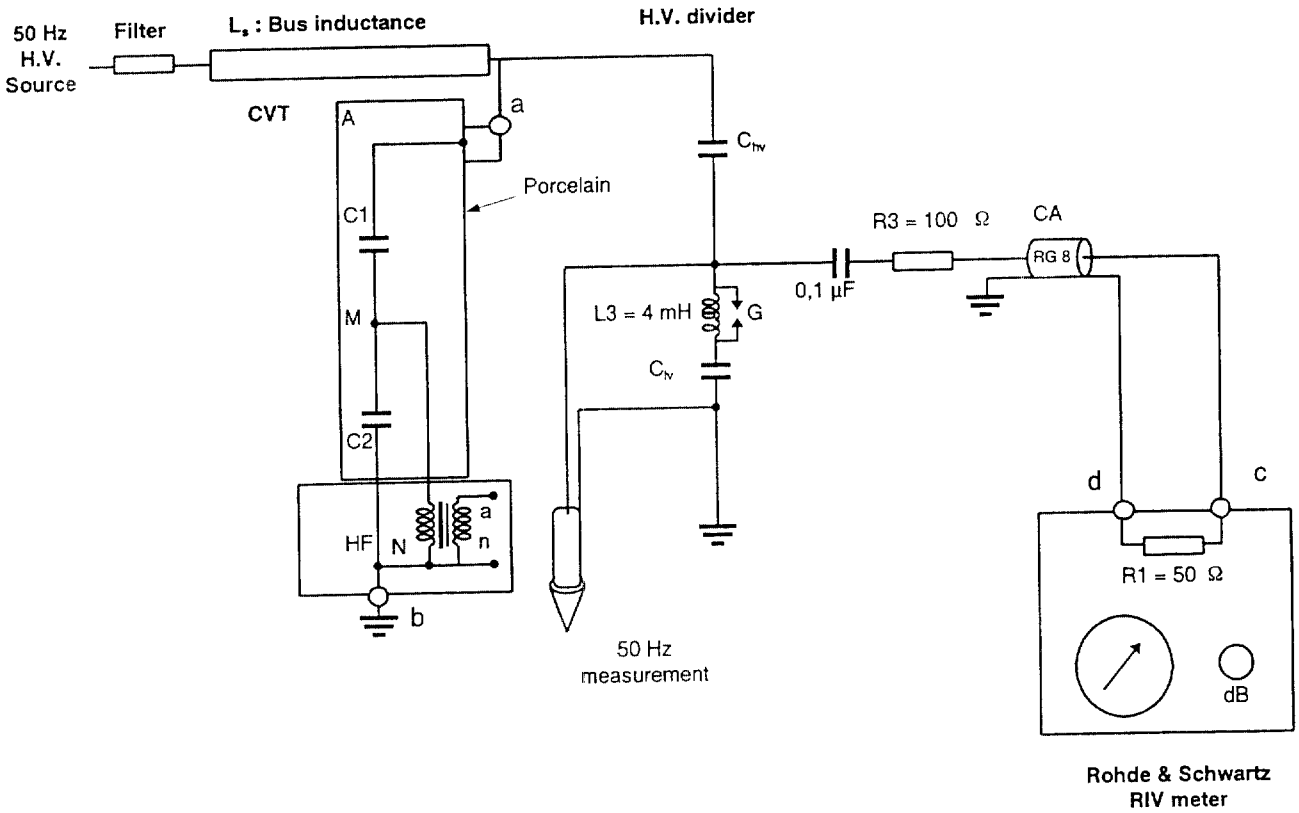

3 - Test procedure :

To fulfil the CEI 60044-5 Ed1.0 §8.10 standard draft, voltage steps and measurements (underscored) have been added to those defined in CEI 60694 §6.3.

The voltage applied to the apparatus is rised until 1,5 Um/√ 3 **(212.2 kV)**. This value is maintened for 30 seconds, then the voltage is decreased to 1.1 Um/√ 3 **(155.6 kV)**.

The test voltage 1.1 Um/√ 3 **(155.6 kV)** is applied to the aparatus for at least 5 minutes – a RIV level measurement shall be performed after 30 seconds– and decreased by steps down to 0.3 Um/√ 3 **(42.4 kV)**, then raised again by steps to the initial value and finally decreased by steps to 0.3 Um/√ 3.

At each step a radio interference measurement is taken and the radio interference level, as recorded during the last series of voltage reduction, are plotted versus the applied voltage ; the curve so obtained is the radio influence characteristic of the apparatus under test.

Measurements are performed with voltage step equals to 0.1 Um/√ 3 **(14.1 kV)**.

3.1 Test circuit attenuation measurement

This measurement is performed before each test described in § 3.2 and § 3.3.

An AC voltage of 100 mV r.m.s. –its amplitude must be at least ten time the ambiant level, wich is measured by the radio noise meter when tuned to the output of the signal generator–, 1 MHz is applied :

- Between high voltage terminal of the object under test and earth ⇒ E_{cd} (μV)
- At the meter input ⇒ E_{ab} (μV)

The circuit RIV factor (P) is deduced by ratio $P = \frac{E_{cd}}{E_{ab}}$.

3.2 Ambiant noise measurement

RIV levels are recorded **(apparatus under test disconnected)** for each voltage step.
P factor is applied to each measurement.

3.3 Mesurement of radioelectric disturbances due to the tested object

Apparatus under test is now connected and a new attenuation factor is measured. Background level is recorded. RIV levels are recorded for each voltage step :

Radioelectric disturbances level is deduced from the measured values by the following relations :

$$(1)\quad \text{Real level (dB}\mu\text{V)} = \frac{\text{Read value (dB}\mu\text{V)}}{P}$$

$$(2)\quad \text{Real level (}\mu\text{V)} = 10^{\frac{\text{Real level (dB}\mu\text{V)}}{20}}$$

Note : the meter gives 0 dB for 1 μV

4 Specifications

Maximum RIV voltage is 250 µV (ANSI C93.1-1990 Table 4)
Ambiant level must be lower by half than the limit mentioned above.
P should be higher than 0.2 (NEMA §3.2.5).

5 Results

5.1 Circuit RIV factor (apparatus disconnected)

Applied signal : 100 mV - 1 MHz

E_{cd} = 21.38 mV

Eab = 98.86 mV

$$P = \frac{E_{cd}}{E_{ab}} = 0.216$$

5.2 Ambiant level measurement (apparatus disconnected)

Voltage (kV r.m.s.)	Read value without attenuation (dBµV)	Real level (dBµV) see (1)	Real level (µV) see (2)
155.6	-3.5	-16.2	0.15
141.5	-3.5	-16.2	0.15
127.3	-3.5	-16.2	0.15
113.2	-3.5	-16.2	0.15
99.0	-3.5	-16.2	0.15
84.9	-3.5	-16.2	0.15
70.7	-3.5	-16.2	0.15
56.6	-3.5	-16.2	0.15
42.4	-3.5	-16.2	0.15

Ambiant level is below specified limits

5.3 Circuit RIV factor (apparatus connected)

Applied signal : 100 mV - 1 MHz

E_{cd} = 18.6 mV

E_{ab} = 88.1 mV

$$P = \frac{E_{cd}}{E_{ab}} = 0.211$$

5.4 Measurement of RIV due to the tested object

Voltage (kV eff)	Read value without attenuation (dBµV)	Real level (dBµV) see (1)	Real level (µV) see (2)
155.6	-3.5	-16.2	0.15
141.5	-3.5	-16.2	0.15
127.3	-3.5	-16.2	0.15
113.2	-3.5	-16.2	0.15
99.0	-3.5	-16.2	0.15
84.9	-3.5	-16.2	0.15
70.7	-3.5	-16.2	0.15
56.6	-3.5	-16.2	0.15
42.4	-3.5	-16.2	0.15

The tested apparatus shows a radio interference level below specified limits.

RADIO INTERFERENCE VOLTAGE MEASUREMENT
according to IEC 60 694 §6.3 and 38/249/CDV (Draft CEI 60044-5 ed1.0) §8.10

1 - Test conditions :

Tests are performed on whole apparatus and no correction for atmospheric conditions is applied.

Test procedure and condition are specified in IEC's standards CISPR 16 and 18.

The measurement frequency is 500 kHz (Rhode & Schwartz meter).

2 - Measuring circuit

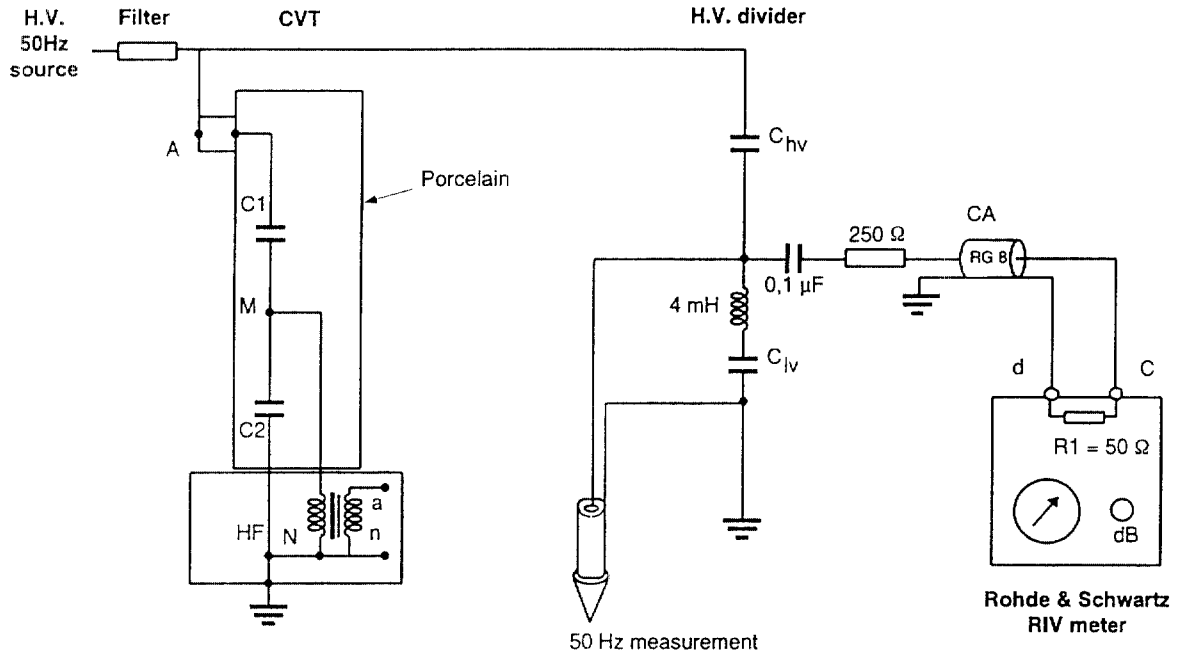

3 - Test procedure :

3.1 Test circuit attenuation measurement

A calibrated impulse signal is applied between high voltage terminal of the object and earth, then at the input of the RIV meter. The attenuation (Att) is given by the difference between measured levels.

3.2 Measurements of radioelectric disturbances due to the tested object

In order to allow a comparison with measurements performed according to NEMA 107, applied voltages are those defined in IEC 60694 §6.3 .

The test voltage 1.1 Um/√ 3 (**155.6 kV**) is applied to the aparatus for at least 5 min and decreased by steps down to 0.3 Um/√ 3 (**42.4 kV**), then raised again by steps to the initial value and finally decreased by steps to 0.3 Um/√ 3 (**42.4 kV**). At each step a radio interference measurement is taken and the radio interference level, as recorded during the last series of voltage reduction, are plotted versus the applied voltage ; the curve so obtained is the radio influence characteristic of the apparatus under test.

No other dielectrical tests were performed in the 2 hours former this test.

Measurements are performed with voltage step equals to 0.1 Um/√ 3 (**14.1 kV**).

4 Spécifications

The maximal RIV voltage is 2500 µV (CEI 6[illegible]§6.3) and the background level should be lower than half of this limit.

5 Results

5.1 Test conditions

Atmospheric conditions during test :

Temperature (°C)	20.5
Pression (mb)	1005
Relativ humidity (%)	60.2

Test have been performed on a clean and dry apparatus

5.2 Results

Test n°	1
Circuit attenuation (dB)	20.7

Voltage (kV eff)	Read value without attenuation (dBµV)	Real level (dBµV) see (1)	Real level (µV) see (2)
155.6	-3.5	32.8	43.5
141.5	-3.5	32.8	43.5
127.3	-3.5	32.8	43.5
113.2	-3.5	32.8	43.5
99.0	-3.5	32.8	43.5
84.9	-3.5	32.8	43.5
70.7	-3.5	32.8	43.5
56.6	-3.5	32.8	43.5
42.4	-3.5	32.8	43.5

The tested apparatus shows a radio interference level below specified limits.

The RIV level as shown in results is deduced from the values readed on the meter by the following relations :

Standard sets branch impedance of and the meter input one is 50 Ω, that makes :

(1) Level in dB to 300 Ω terminals = readed value + Att + 15.56 dB

(2) Level in µV to 300 Ω terminals = $6 \times 10^{\frac{Att + \text{Read value}}{20}}$

6 factor is due to (300/50) ratio of the impedance on wich RIV level is asked and the impedance on wich measurement is performed (20log6 = 15.56).

There are no other correction factor due to conversion dBµV → µV as the measurement device used (Rhode & Schwartz) gives 0dB for 1 µV.

The attenuation value (Att) is given by the difference between readed value on the meter for the same signal applied to CVT terminals on one hand and to RIV meter input on the other hand.

CAPACITANCE AND CAPACITOR LOSSES TANGENT δ MEASUREMENT BEFORE AND AFTER DIELECTRICAL TESTS (according to CEI 60358 ed. 2 §7 et §8)

1 - Test conditions

The apparatus under test is installed on a 2 meters high frame. The HF terminal and the tank are earthed together through the capacitance and tangent d measurement bridge.

A full oil tank is placed instead of the electromagnetic unit tank.

This test is performed at ambient temperature, before and after dielectric tests (lightning impulses and 50 Hz tests).

2 - Test procedure

U_{PR}= 220 kV / √ 3 (127 kV)

Tests are realized at nominal frequency and at a voltage of **0.1 U_{PR}** and then **U_{PR} ± 10 %**. In this conditions, capacitance and dielectric dissipation factor are recorded

3 - Test circuit diagram

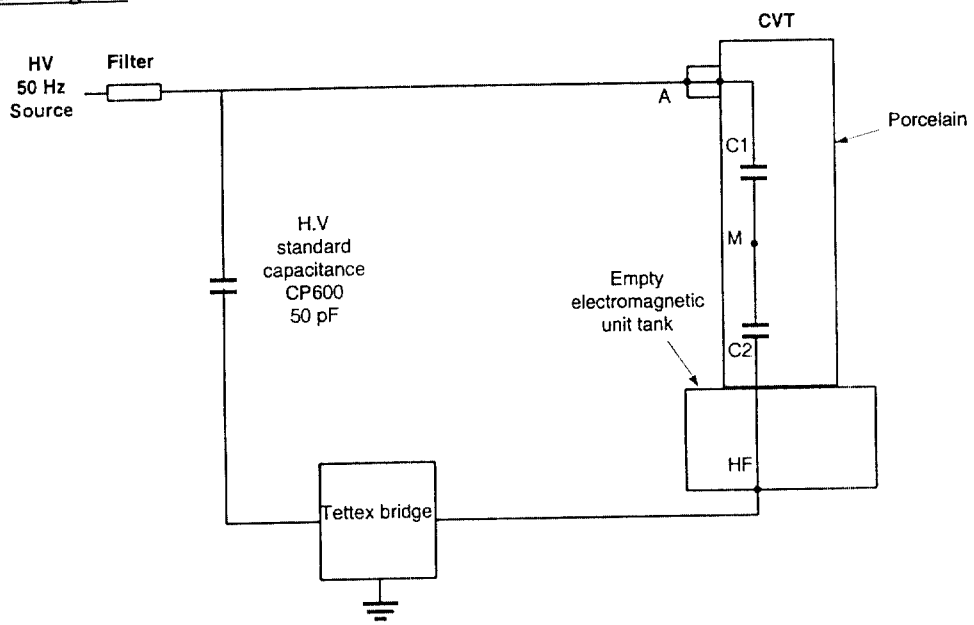

4 - Specifications

The measured capacitance shall not differ from rated value by more than - 5% or +10%.

If a difference exists between the 2 measurements (before and after dielectrical tests), this difference should not indicate a puncture of one or more elements.

$0.95\ Cn \leq C \leq 1.1\ Cn \Rightarrow 4180\ pF \leq C \leq 4840\ pF$

$Tg\ \delta \leq 5.10E\text{-}3$

5 - Results

	Temperature	Voltage (kV)	C (pF)	Tg δ	Performed the
Before dielectrial tests	20.3	12.7	**4598**	**7.79.10E-4**	11/29/00
After dielectrical tests	20.7	12.7	**4600**	**8.70.10E-4**	12/04/00
		127	**4600**	**7.66.10E-4**	
Measurement accuracy	± 0.6°C	± 3%	± 0.5 % of measured C (Tettex bridge)	± 0.5.10^{-4} (Tettex bridge)	

C and Tg δ values agree with specifications.

FULL AND CHOPPED IMPULSE TEST ON CAPACITOR VOLTAGE DIVIDER (according to IEC 60186 § 50 ; IEC 60186 Amendement 2 §18)

1. Test conditions

The apparatus is on a frame. Test is performed on whole apparatus.

Lightning impulses have been applied between terminal A and earth. N, n, HF terminals as well as the tank are connected together and linked to earth.

No correction for atmospheric condition is applied.

Tolerance on the waveform for full lightning impulse (according to IEC 60186 2nde Ed. 1987 §50) :

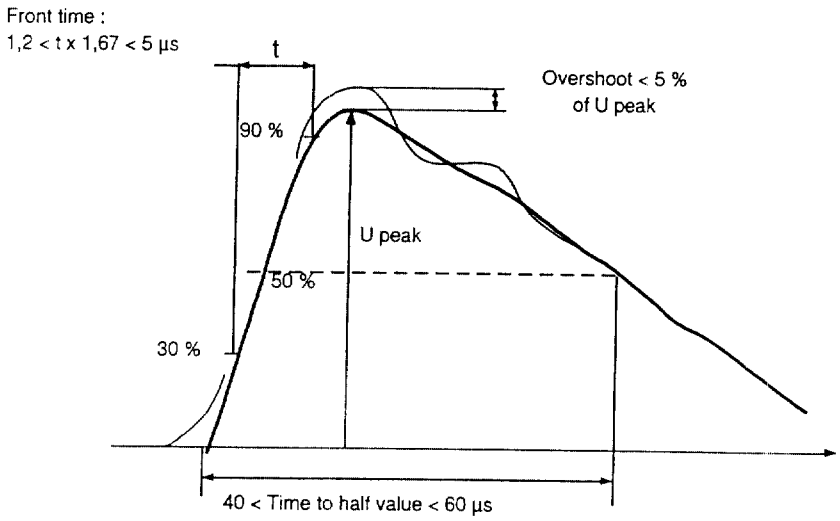

Tolerance on the waveform for chopped lightning impulse -CEI 60186 Amendement 2 § 18 :

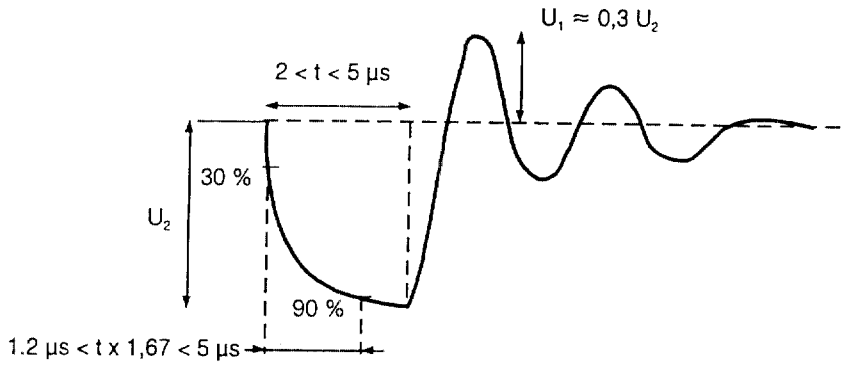

Nota : U_1 must be lower than 30% of U_2 value. This level adjustment can be obtained by adding a resistor (R< 10 Ω) between the apparatus under test and the triggered sphere chopping gap.

2. Circuit diagram

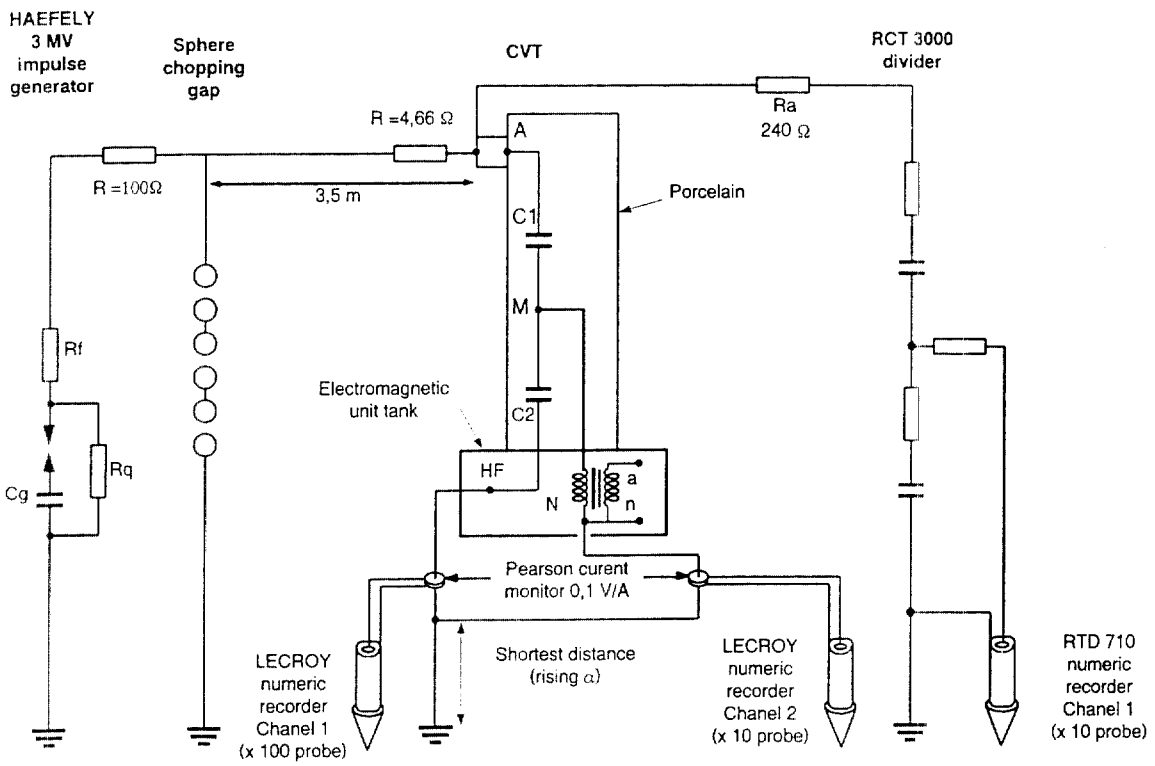

3 - Test procedure :

This test is a combination between full -according to IEC 60186 2nde Ed. 1987 §50 and IEC 60186 Am. 2 §13- and chopped lightning impulses -according to IEC 60186 Amendement 2 1995-09 § 18.

The rated lightning impulse withstand voltage is U_{test} = 1050 kV.

Positive polarity :

- A full reference lightning impulse at 60 % of U_{test} (**630 kV**).
- 15 full impulses at U_{test} (see oscillograms page 29).

Negative polarity :

- A full reference lightning impulse at 60 % of U_{test} (**630 kV**).
- One full impulse at U_{test}.
- Two chopped impulses at 1.15 U_{test} (**1207 kV**) (see oscillogram page 30).
- A full reference lightning impulse at 60 % of U_{test} (**630 kV**).
- 14 full impulses at U_{test} (see oscillograms page 31).

4 - Specifications

No more than two flashovers per polarity and no internal perforation are allowed.

5 - Results

No waveform variations was noticed between first and last recording.
No internal or external flashover happened during the test.

WET POWER FREQUENCY WITHSTAND TEST OF CAPACITOR VOLTAGE DIVIDER (according to IEC 60358 éd. 2 §9.2.2 and CEI 60186 Am. 2 §14)

1 - Test conditions.

The apparatus under test is installed on a 2 meters high frame. A full oil tank is used instead of the electromagnetic unit tank.

2 - Test procedure

Precipitation conditions : see next page.

A 50 Hz sinusoidal voltage of **460 kV** r.m.s.(CVT 245 kV) is applied during **1 minute** between A terminal and the earth. The tank and HF terminal are earthed together.

Atmospheric correction factor is applied. Applied voltage is recorded during whole test.

3 - Circuit diagram

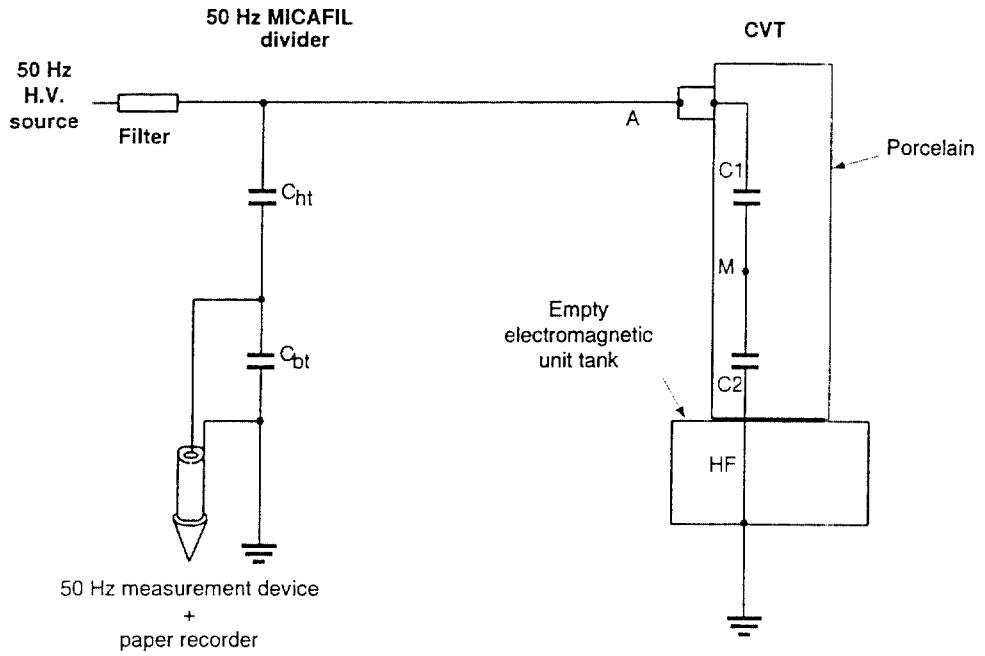

4 Specifications

No disruptive discharge is allowed.

5 -Results

No disruptive discharge was noticed.

WET POWER FREQUENCY WITHSTAND TEST OF CAPACITOR VOLTAGE DIVIDER (according to IEC 60358 éd. 2 §9.2.2 and IEC 60186 Am. 2 §14)

Precipitation conditions :

The tests were performed according to IEC 60060-1 publication § 9.1.

Measurements consisted of vertical movements (1m length :) on the apparatus under test.

Ambient temperature : 19.3 °C

RECORDED PARAMETERS	MEASURED VALUES		SPECIFIED VALUES
AVERAGE PRECIPITATION RATE (mm/mn)	Top	Bottom	
- Horizontal components	1.3	1.4	1 à 2
- Vertical components	1.8	1.6	1 à 2
LIMIT VALUES (mm/mn) for any individual measurement:			
- Horizontal component	0.2		± 0.5
- Vertical component	0.5		± 0.5
TEMPERATURE OF WATER (°C)	17.6		AMBIENT TEMPERATURE ± 15
RESISTIVITY OF WATER AT 20°C	97 µS/cm		$100 \pm 15\ (\Omega m)$ or $100^{+18}_{-13}\ (\mu S/cm)$

ANNEXE 1 / *APPENDIX 1*

PLAN DE L'APPAREIL / *APPARATUS PLAN*

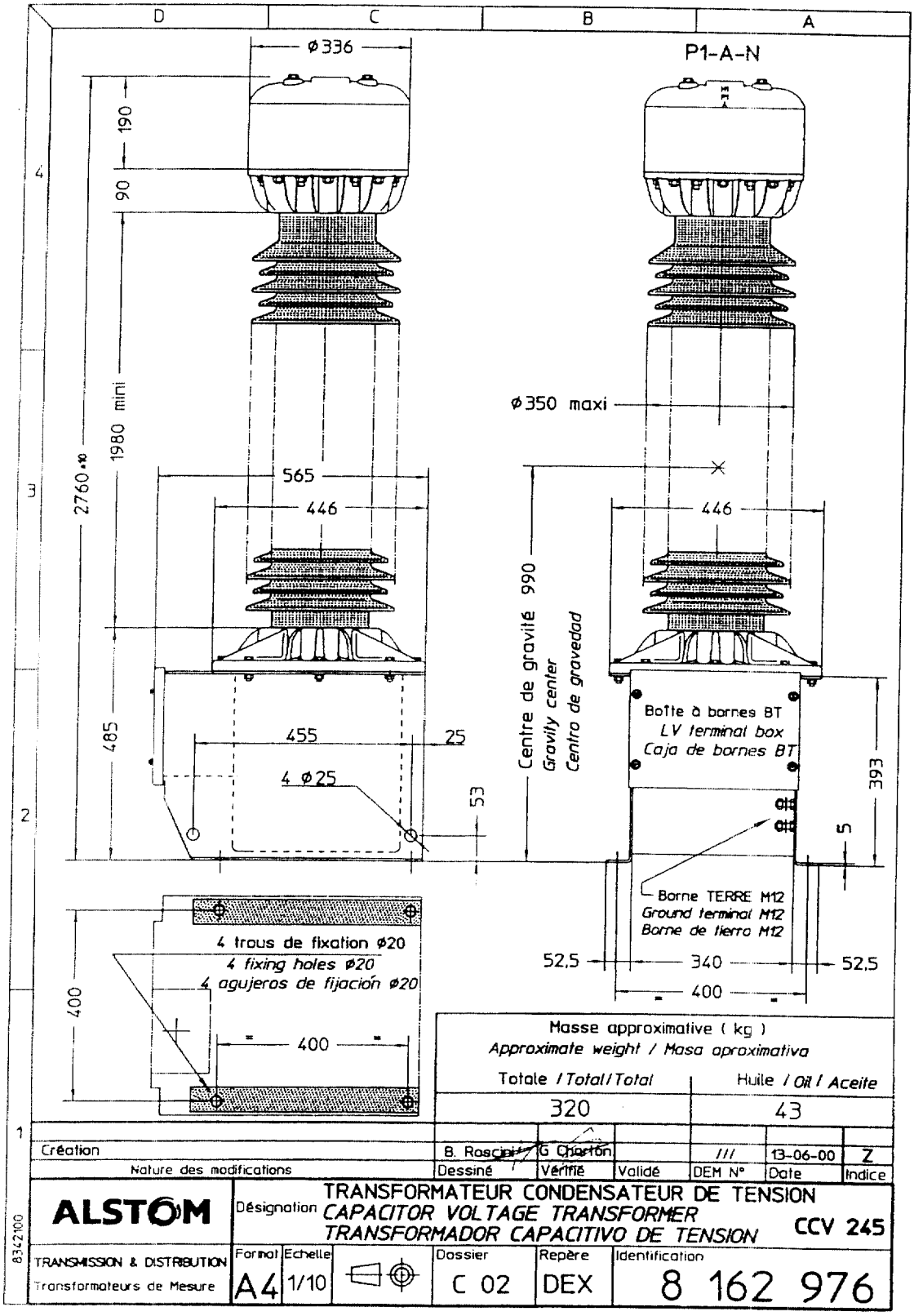

FORME D'ONDE CHOC PLEIN POLARITÉ POSITIVE / *FULL POSITIV POLARITY IMPULSE WAVE SHAPE*

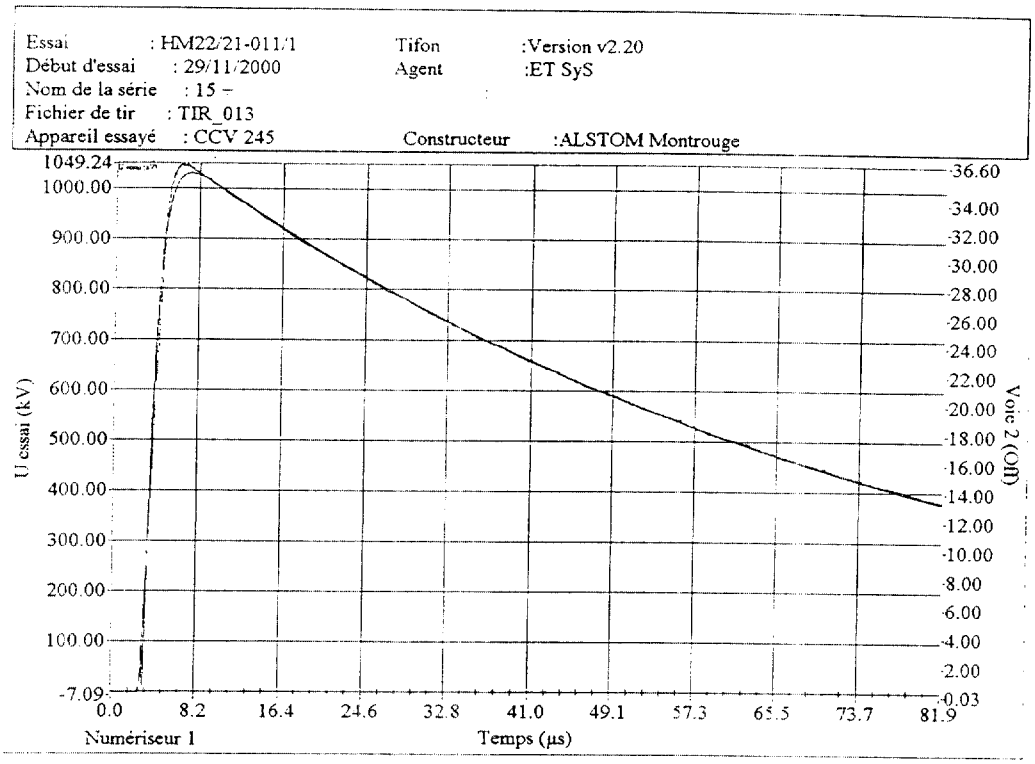

Numériseur 1, voie 1 (U essai), dépouillement : Onde de foudre, polarité Positive
Valeur d'essai = 1049.24 kV Valeur de crete = 1049.24 kV Temps de front = 2.58 µs
Temps de queue = 54.94 µs Fréquence dominante = 305.18 kHz Rd générateur = 0.84
Ampl. de l'overshoot = 1.84 % Durée de l'overshoot = 2.40 µs

ENREGISTREMENTS DES COURANTS / CURRENTS RECORDS

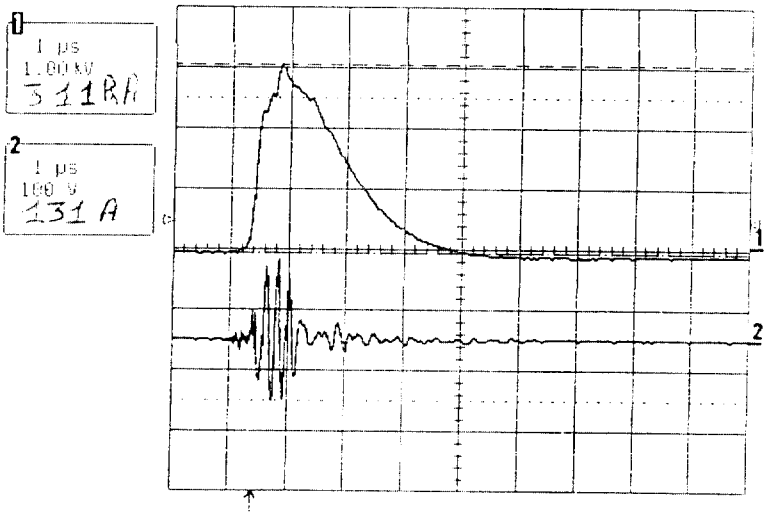

FORME D'ONDE CHOC COUPE POLARITÉ NEGATIVE / *CHOPPED NEGATIV POLARITY IMPULSE WAVE SHAPE*

Essai : HM22/21-011/1 Tifon :Version v2.20
Début d'essai : 29/11/2000 Agent :ET SyS
Fichier de tir : TIR_023
Appareil essayé : CCV 245 Constructeur :ALSTOM Montrouge

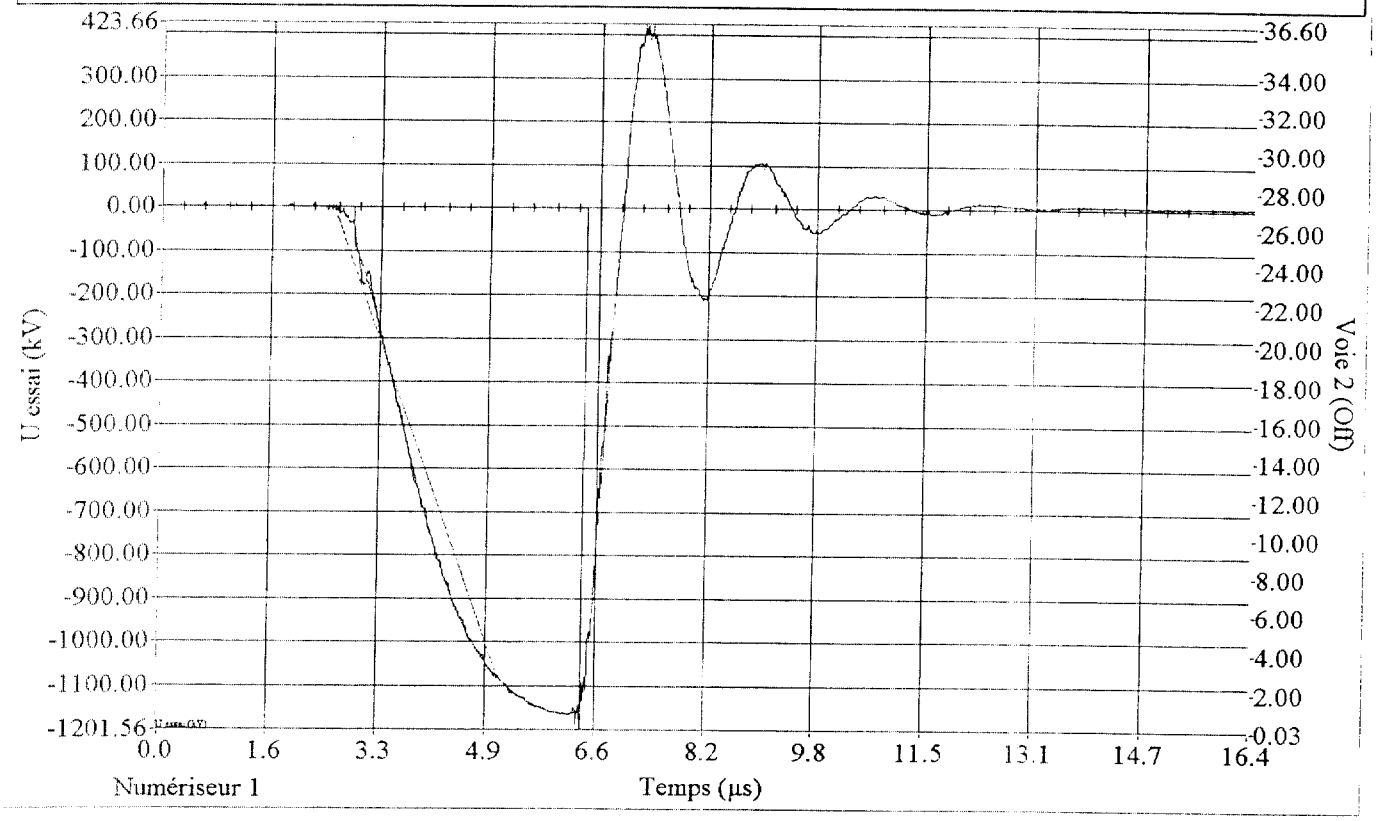

Numériseur 1, voie 1 (U essai), dépouillement : Onde de foudre, polarité Négative
Valeur d'essai = 1201.56 kV Valeur de crete = 1201.56 kV Temps de front = 2.83 µs
Vc/Tf = 424.61 kV/µs Temps à la coupure = 3.78 µs Tension à la coupure = 1201.56 kV
Raideur de la coup. = 1372.20 kV/µs Durée de la coupure = 0.53 µs Premier rebond = 17.82 %

FORME D'ONDE CHOC PLEIN POLARITÉ NÉGATIVE / *FULL NEGATIV POLARITY IMPULSE WAVE SHAPE*

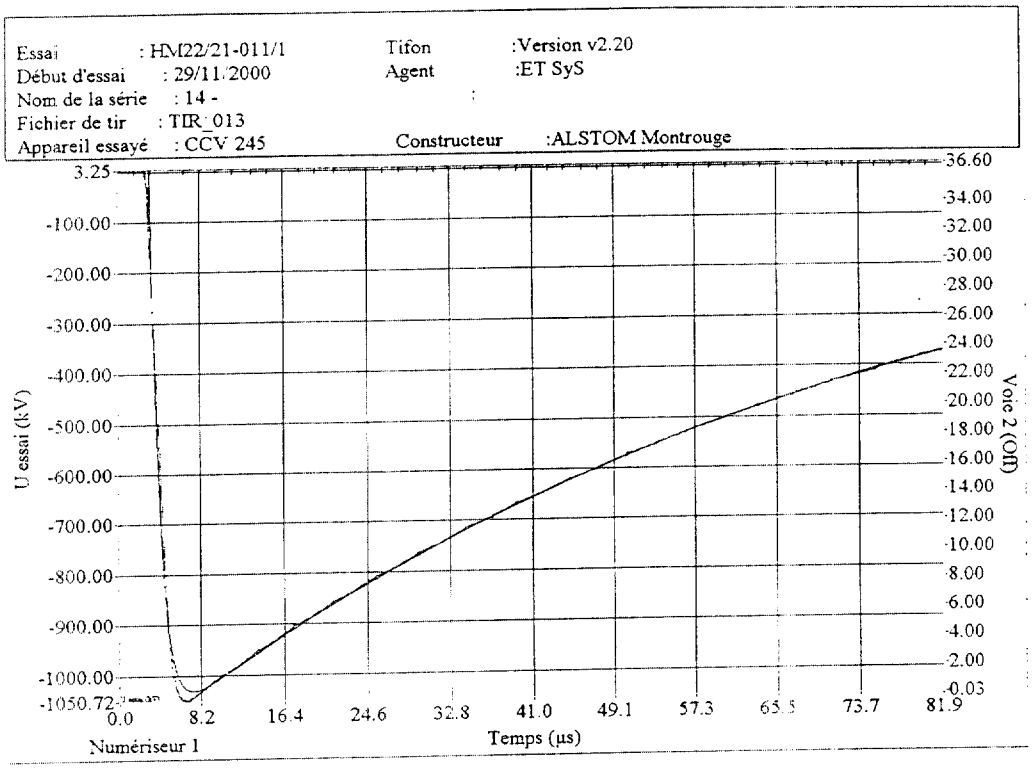

Numériseur 1, voie 1 (U essai), dépouillement : Onde de foudre, polarité Négative
Valeur d'essai = 1050.72 kV Valeur de crete = 1050.72 kV Temps de front = 2.59 µs
Temps de queue = 54.08 µs Fréquence dominante = 317.38 kHz Rd générateur = 0.83
Ampl de l'overshoot = 1.86 % Durée de l'overshoot = 2.51 µs
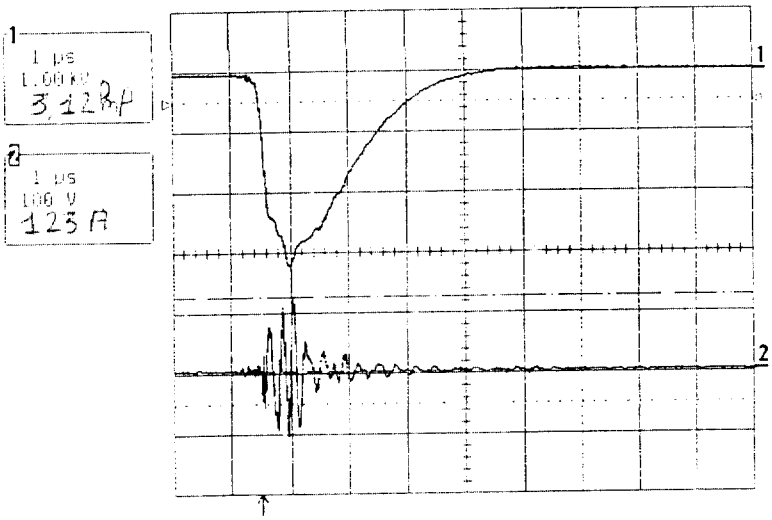
ENREGISTREMENTS DES COURANTS / CURRENTS RECORDS